THE WORLD OF WEATHER DATA - THE WORLD OF WEATHER DATA - THE WORLD OF WEATHER DATA

Instruction for Use

021568/09/13

Ultrasonic Anemometer 1D

4.3865.xx.xxx
4.3866.xx.xxx
4.3867.xx.xxx
from software version V3.12

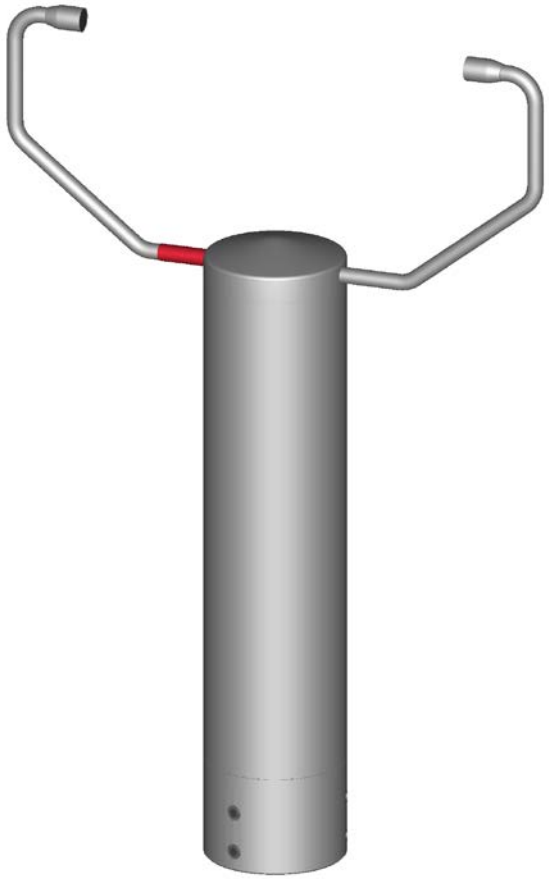

ADOLF THIES GmbH & Co. KG

Hauptstraße 76 37083 Göttingen Germany
Box 3536 + 3541 37025 Göttingen
Phone +49 551 79001-0 Fax +49 551 79001-65
www.thiesclima.com info@thiesclima.com

Safety Instructions

- Before operating with or at the device/product, read through the operating instructions.
  This manual contains instructions which should be followed on mounting, start-up, and operation.
  A non-observance might cause:
  - failure of important functions
  - endangerment of persons by electrical or mechanical effect
  - damage to objects
- Mounting, electrical connection and wiring of the device/product must be carried out only by a qualified technician who is familiar with and observes the engineering regulations, provisions and standards applicable in each case.
- Repairs and maintenance may only be carried out by trained staff or **Adolf Thies GmbH & Co. KG**. Only components and spare parts supplied and/or recommended by **Adolf Thies GmbH & Co. KG** should be used for repairs.
- Electrical devices/products must be mounted and wired only in a voltage-free state.
- **Adolf Thies GmbH & Co KG** guarantees proper functioning of the device/products provided that no modifications have been made to the mechanics, electronics or software, and that the following points are observed:
- All information, warnings and instructions for use included in these operating instructions must be taken into account and observed as this is essential to ensure trouble-free operation and a safe condition of the measuring system / device / product.
- The device / product is designed for a specific application as described in these operating instructions.
- The device / product should be operated with the accessories and consumables supplied and/or recommended by **Adolf Thies GmbH & Co KG** .
- Recommendation: As it is possible that each measuring system / device / product may, under certain conditions, and in rare cases, may also output erroneous measuring values, it is recommended using redundant systems with plausibility checks for **security-relevant applications**.

Environment

- As a longstanding manufacturer of sensors Adolf Thies GmbH & Co KG is committed to the objectives of environmental protection and is therefore willing to take back all supplied products governed by the provisions of "*ElektroG*" (German Electrical and Electronic Equipment Act) and to perform environmentally compatible disposal and recycling. We are prepared to take back all Thies products concerned free of charge if returned to Thies by our customers carriage-paid.

- Make sure you retain packaging for storage or transport of products. Should packaging however no longer be required, please arrange for recycling as the packaging materials are designed to be recycled.

Documentation

- © Copyright **Adolf Thies GmbH & Co KG**, Göttingen / Germany
- Although these operating instruction has been drawn up with due care, **Adolf Thies GmbH & Co KG** can accept no liability whatsoever for any technical and typographical errors or omissions in this document that might remain.
- We can accept no liability whatsoever for any losses arising from the information contained in this document.
- Subject to modification in terms of content.
- The device / product should not be passed on without the/these operating instructions.

Contents

1 Application 6
1.1 Mode of operation 7
2 Measuring principle 8
2.1 Wind velocity and direction 8
2.2 Acoustic virtual temperature 9
3 Preparation for operation 12
3.1 Selection of installation site 12
3.2 Installation of anemometer/working direction 12
3.3 Mechanical Mounting: US- Anemometer 4.3865.xx.xxx und 4.3866.xx.xxx 13
3.4 Mechanical Mounting: US- Anemometer 4.3867.xx.xxx 13
3.5 Electrical Installation: US- Anemometer with Connector (4.3866… and 4.3867…) 14
3.5.1 Connection, Cables, Cable preparation and Coupling socket Installation 14
3.5.2 Connector Pin Assignment (Examples of Function) 16
3.6 Electrical Installation: US- Anemometer with Cable (4.3865….) 17
3.6.1 Cable Pin Assignment (Examples of function) 17
4 Maintenance 18
5 Calibration 18
6 Warranty 18
7 Functional description 19
7.1 Serial communication 19
7.1.1 Duplex mode 19
7.1.2 Response Delay 20
7.1.3 General telegram structure 20
7.1.4 Return values of ULTRASONIC 21
7.1.5 Access Mode 22
7.1.6 Baud rate 23
7.1.7 Instrument ID 23
7.1.8 Bus mode 24
7.2 Analogue and digital I/O 24
7.2.1 Analog inputs 24
7.2.2 Analogue outputs 25
7.2.3 Scaling of analog wind velocity 26
7.2.4 Output of the analogue Wind Direction 26
7.2.5 Output of the analogue Virtual Temperature 27
7.3 Data acquisition 27
7.3.1 Instantaneous values and output of raw measured values 27
7.3.2 Averaging 28
7.3.3 Standard deviation 28
7.3.4 Measurement in Burst Mode 29

7.3.5 Gust Acquisition 32
7.4 Serial data output 33
7.4.1 Data enquiry....33
7.4.2 Independent telegram output 33
7.4.3 Fixed telegram formats 34
7.4.4 Generation of check sum 34
7.4.4.1 Type 1 35
7.4.4.2 Type 2 35
7.4.5 User-specific telegram 35
7.4.5.1 Generation of a new, user-specific telegram.... 35
7.4.5.2 Attachment of definitions 36
7.4.5.3 Deletion of definitions 36
7.4.5.4 Storage of definitions.... 37
7.4.5.5 Available measured values and data formats 37
7.4.5.6 Data formats.... 39
7.4.6 Status information 42
7.4.6.1 Extended status information 43
7.4.6.2 THIES status 44
7.4.6.3 Status Information in the Bayern Hessen Format 44
7.5 Behavior of Instrument under extreme Conditions of Measurement Value Acquisition 45
7.5.1 In the event of error....45
7.5.2 Behaviour of analog outputs....45
7.5.3 Behaviour of telegram output 45
7.6 Heating control 46
7.7 Output of all system parameters....48
7.8 Enquiry about software version....48
7.9 Operating Hours Counter....49
7.10 Storing of System Events 49
7.11 Bayern Hessen mode 50
7.12 Forcing a restart 50
7.13 Energy-saving mode....50
7.14 Bootloader 51
7.14.1 X-Modem Boot loader 52
7.15 Fast boot 53
7.16 Plausibility....53
7.17 Online help 53
8 Configuration of ultrasonic anemometer by customer 54
8.1 Storing of Parameter Data Set....54
8.2 Establishing of Delivery Condition....54
8.3 Administration of User Information 55
9 List of Commands....56
10 Command and description....58

11 Appendix 1 Predefined data telegrams 87
11.1 Telegram 1 VD 87
11.2 Telegram 2 VDT 87
11.3 Telegram 3 V4DT 88
11.4 Telegram 4 NMEA 88
11.5 Telegram 5 VDT, Standard deviation 89
11.6 Telegram 8 VD Variant 1 90
11.7 Telegram 9 VDT Variant 1 90
11.8 Telegram 11 VDT Variant 2 91
11.9 Telegram 12 Scientific Telegram 91
11.10 Telegram 13 VDT Variant 3 92
12 Technical data 93
13 Dimension Drawing 95
14 Accessories (available as optional features) 97
15 EC-Declaration of Conformity 98

Figure

Figure 1: working direction 13
Figure 2: Dimension Drawing for 4.3865… and 3866… 95
Figure 3: Dimension Drawing for 4.3867… 96

Table

Table 1: Restrictions in full and half duplex mode 20
Table 2: Return values with incorrect interpretation of command 21
Table 3: Access key for different command levels 22
Table 4: Config. of analog outputs WV/RXD- and WD/RXD+ with parameters AN and SC 25
Table 5: List of predefined data telegrams 34
Table 6: Measured values and data types for user-specific telegram 38
Table 7: Adjustment of averaging periods with parameter AV 63
Table 8: Measuring instrument addresses in Bayern Hessen command interpreter 64
Table 9: List of baud rates with telegram BR 65
Table 10: List of baud rates with telegram BX 66
Table 11: Pulse control factor with switch-on of heating 74
Table 12: Conversion factors between different wind velocities 77
Table 13: Configuration of analog outputs WV/RXD- and WD/RXD+ with parameters AN and SC 80

Operating Instructions

These operating instructions describe all possible applications and settings of the instrument. **The Ultrasonic Anemometer 1D is factory-set.** Identification for the factory setting derives from the order No. and the respective "Factory Setting"

Order number and Setting
see supplementary sheet
"Factory Setting"

With these detailed operating instructions and via the serial interface of the Ultrasonic Anemometer 1D it is possible for the user to adapt the factory-settings to his own requirements.

1 Application

The **Ultrasonic Anemometer 1D** is used to detect the horizontal components of **wind velocity** and **wind direction** as well as the **virtual temperature** in 1 dimension.

The instrument is especially suited for application in the fields of:

- Flow-directed environments, where the main wind vector is expected only from two opposite directions
- Traffic engineering, tunnel measuring technology
- Flows in tubes
- Indoor flow measurement

More than 25 different measurement values are available, such as:

- Wind velocity (Y– path)
- Wind direction (output: 0°, 1° or 181°)
- Acoustic-virtual temperature [°C]
- Standard deviation of the vectorial wind velocity (Y – path)
- Standard deviation of the Acoustic-virtual temperature
- Wind velocity of the gust
- Wind direction of the gust
- Measurement in Burst mode with trigger via plug PIN and recording of an analogue input value
- More measuring values please refer to chapter 7.4.5.5 (measurement values and data formats available)

Due to the measuring principle the instrument is ideal for inertia-free measurement of gusts and peak values.

The level of accuracy achieved when measuring the air temperature (virtual temperature) surpasses that of classical methods, in which the temperature sensors are used with weather and radiation protection, following correction of the influence of damp occurring with certain weather situations.

Output of the measured values can be either digital and / or analogue.

Digital output: An RS485/422 is available for serial communication. It can be operated in full or half-mode. For the output of measured values there are a number of predefined telegrams or a user-defined telegram (e.g. WV, WD, virtual temp., standard deviation, status information, NMEA etc.).

Analogue outputs: Wind velocity and direction as well as acoustic-virtual temperature are output either as a current or voltage signal. Individual measuring range scaling of the analogue outputs for WV and WD are selectable.

The analogue outputs can be switched alternatively and individually as analogue voltage inputs (max. 3). These measuring values are output via the serial interface within a user-defined telegram.

The serial or analogue output of the data is either as an instantaneous value or as a gliding mean.

The sensor arms are automatically heated if necessary with critical ambient temperatures. This also ensures functionality with snowfall and sleet and minimises the risk of malfunctions due to icing-up.

1.1 Mode of operation

The **Ultrasonic Anemometer 1D** consists of 2 ultrasonic transformers, facing each other at a distance of 200 mm. The transformers function both as acoustic transmitters and receivers.

The electronic control system is used to select the respective measuring direction. When a measurement starts, a sequence of 2 individual measurements is performed in both directions of the measurement paths at maximum speed.

The mean values are worked out from the 2 individual measurements and used to make further calculations.

The time required for a measuring sequence is approx. 2.5 msec at +20°C at the maximum measuring speed.

2 Measuring principle

2.1 Wind velocity and direction

The speed of propagation of the sound in calm air is superposed by the velocity components of an air flow in the direction of the wind.

A wind velocity component in the propagation direction of the sound supports the speed of propagation; i.e. it increases it while a wind velocity component against the propagation direction reduces the speed of propagation.

The propagation speed resulting from superposition leads to different propagation times of the sound at different wind velocities and directions over a fixed measurement path.

As the speed of sound greatly depends on the temperature of the air, the propagation time of the sound is measured in **both** directions. This rules out the influence of temperature on the measurement result.

When using a measurement path one obtains the direction 0° resp. 180 ° as angle information, which is implemented internally to 1° and 181°. The output 0° is reserved for the calm.
In the ULTRASONIC 1D, only the Y-component of the wind velocity vector is analyzed! The X-component of the wind velocity is not acquired.

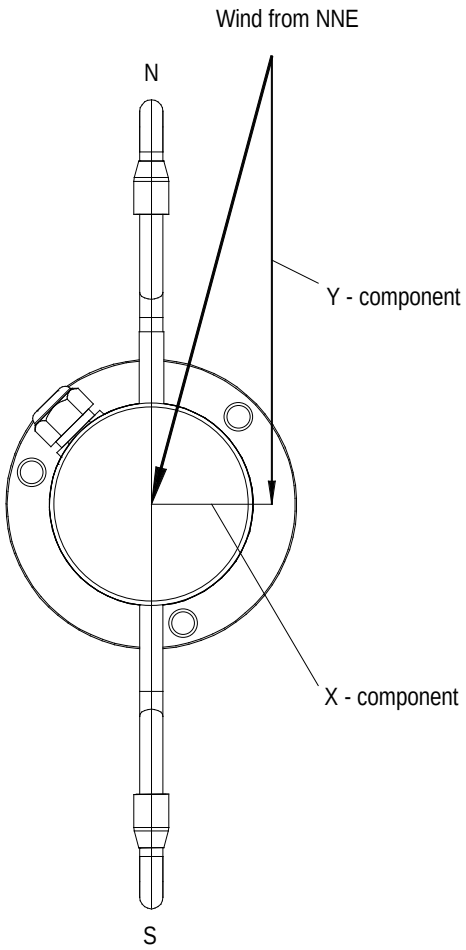

2.2 Acoustic virtual temperature

The thermodynamic interrelationship between the propagation velocity of sound and the absolute temperature of the air is defined by a root function. The sound velocity is also more or less independent of the air pressure and only depends on the absolute air humidity to a minor extent. This physical interrelationship between sound velocity and temperature is ideal when measuring the air temperature as long as the chemical composition is known and constant.

The levels of gases in the atmosphere are constant and with the exception of water vapour content vary at most by a few 100 ppm (CO_2) even over lengthy periods.

Determination of gas temperature via its sound velocity is performed directly from measurement of its physical properties without the step of thermal coupling of this gas to a sensor which would otherwise be necessary.

The advantages of this measuring method are firstly its inertia-free reaction to the actual gas temperature, and secondly, the avoidance of measuring errors such as those that occur for example when a solid-state temperature sensor is heated by radiation or cooled through the evaporation of water on the sensor.

Many comparative tests between different weather and thermal radiation shield housings show the indirect effect of the above-mentioned sources of measurement errors on the temperature sensor. [1]
At sites with a high likelihood of icing-up ultrasonic anemometers are also used already as acoustic thermometers, as classical temperature sensors are no longer vented with weather and thermal radiation shield housings after icing-up. Due to the pejorated thermal coupling to the outer world they response only extremely time-delayed, or due to the missing discharge of the own power dissipation the measured temperature is too high. [2]

Given the dependence, albeit low, of the sound propagation velocity on the air humidity level, the "acoustic virtual temperature" relates to dry air without any water vapour content.

The deviation of the measured "acoustic temperature" from the real air temperature shows linear dependence on the absolute humidity level of the air.

The amount of water vapour in the air proportionately increases the velocity of sound as H_2O molecules only have around half the mass of the other air molecules (O_2 and N_2).

The velocity of sound however only increases with the molar mass fraction of water vapour in the air to a disproportionately low degree.

The reason for this is the lower mean translatory velocity of the water vapour molecules in comparison with the other air molecules. With the more complex H_2O molecules greater degrees of freedom of motion are possible than with the more simple O_2 and N_2 molecules so that the total energy content (temperature) is divided between the possible degrees of freedom of translation and rotation as kinetic energy.

O_2 and N_2 molecules have 3 degrees of freedom of translation and 2 degrees of freedom of rotation, and H_2O molecules 3 degrees of freedom of translation and 3 degrees of freedom of rotation.

The adiabatic exponent γ of each gas is determined by the total number of degrees of freedom according to the following interrelationship:

$$\gamma = 1 + \frac{2}{n}$$

The adiabatic exponents measured for dry air γ_d and water vapour γ_v are:

$$\gamma_d = 1.399463 \text{ and } \gamma_v = 1.331$$

The dependence of the acoustic virtual temperature Tv on the water vapour content of the air can be calculated using the following relationship:

$$Tv = Tt \bullet \left[1 + \left[\frac{\gamma_v}{\gamma_d} - \frac{M_v}{M_d} \right] \bullet \frac{e}{p - \left[1 - \frac{M_v}{M_d} \right] \bullet e} \right] \qquad [1]$$

where Tt is the acoustic virtual temperature of dry air and M_v the molar mass of water vapour, and M_d describes the molar mass of dry air. The ratios $\frac{M_v}{M_d}$ with the value 0.621978 and $\frac{\gamma_v}{\gamma_d}$ with the value 0.95108 can be included in the equation as fixed constants. [3]

The ratio $\frac{e}{p}$ describes the water vapour pressure divided by the air pressure. , corrected by the effect of the water vapour pressure on the air pressure.

The vapour pressure e can be calculated according to the relationship $e = \frac{RH}{100} \bullet e_s$ where RH stands for relative humidity and e_s for saturation vapour pressure.

The saturation vapour pressure is a function of temperature and can be calculated according to the Magnus formula with coefficient according to Sonntag

$$e_s(T) = 6.112 hPa \bullet e^{\frac{17.62 \bullet T}{243.12 K + T}} \qquad [4]$$

with the temperature of interest where T must be specified in °C.

The following simplified expression with T as the temperature in Kelvin results for calculation of the acoustic virtual temperature measured with humid air:

$$Tv = Tt \bullet \left[1 + 0{,}329102 \bullet \frac{e}{p - [0{,}378022] \bullet e} \right]$$

The correcting effect of the water vapour pressure on the air pressure is relatively low, and is, for ex., approx. 2,8 % with + 40 °C and 100 % relative humidity.

The water vapour pressures to be expected in the nature are clearly below. The error with the simplification of the formalism can consequently almost be neglected.

Simplified formula: $$Tv = Tt \bullet \left[1 + 0{,}329 \bullet \frac{e}{p} \right]$$

Example:

With an air temperature of + 20°C, relative humidity of 100 % and an air pressure of 1000 hPa an acoustic virtual temperature of 22.25°C is calculated from the sound velocity.

The acoustic virtual temperature is therefore 2.25°C above the actual air temperature and can be corrected accordingly using the above equation if the humidity level of the air is known, e.g. relative humidity and the air pressure.

Calibrated measurements performed in the climatic exposure test cabinet with different temperatures as parameters and relative humidity levels between 10 % and 90 % have shown that the factor in the above equation should be nearer 0.30.

$$Tv = Tt \bullet \left[1 + 0.30 \bullet \frac{e}{p} \right]$$

If required to improve accuracy of the calculated real air temperature, one or more iteration steps could be performed to determine the accurate saturation vapour pressure when using the measured relative humidity and the measured acoustic temperature as corrective variables as the real air temperature (corrected acoustic virtual-temperature) is necessary for the calculation of the saturation vapour pressure.

References:

[1] Lanzinger, Eckhard (Deutscher Wetterdienst), Langmack, Hans (Universität Hamburg): Measuring air temperature by using an ultrasonic anemometer

[2] Musa, Mark (Meteo Swiss), Tammelin, Bengt (Finnish Meteorological Institute) et al.: Measurement of temperature with wind sensors during severe winter conditions

[3] Aspiration-Psychrometer tables, Deutscher Wetterdienst, 7. edition

[4] Coefficient of the Magnus formula acc. to Prof. Dr. Sonntag

3 Preparation for operation

Attention:

The working position of the anemometer 4.3865.., 4.3866.. is user-defined.
The working position of the anemometer 4.3867… is vertical (Sensor arms: top).
During installation, de-installation, transport or maintenance of the anemometer it must be ensured that no water gets into the shaft and connector or cable gland of the anemometer.
When using a lightning rod take care that it be installed in an angle of 45° to a measuring arm; otherwise there will be deviations in the measured values.

3.1 Selection of installation site

As described above, the ultrasonic anemometer transmits sound packages required to measure the propagation speed. If these **sound packages** meet surfaces that reflect sound well, they are thrown back as an **echo** and can result in **incorrect measurements** under unfavourable conditions.

It is therefore advisable to install the ultrasonic anemometer at a **minimum distance of 1 metre to objects in the measuring level**.

The ultrasonic-anemometer has an electro-magnetic compatibility which is far in excess of the required standard threshold value.

Within the complete frequency range, required by standard, electro-magnetic fields with 20 V/m (capacity of the test transmitter) could not affect the measuring value acquisition of the instrument.

In case you intend to install the instrument at transmitter masts or other sources of strong electro-magnetic radiation, where the local field strength is far above the standard threshold value, please contact the manufacturer.

3.2 Installation of anemometer/working direction

The working direction of the instrument is lengthwise to the flow-directive ambient (tunnel, tube, channel etc.) For measurement the sensor arms of the ULTRASONIC have to indicate towards the longitudinal direction of the mainstream at +10° or –10°, see figure 1.

- The red marked Sensor arm is allocated to the flow direction „ 1° “.
- The Sensor arm which is not marked, is allocated to the flow direction „ 181° “.

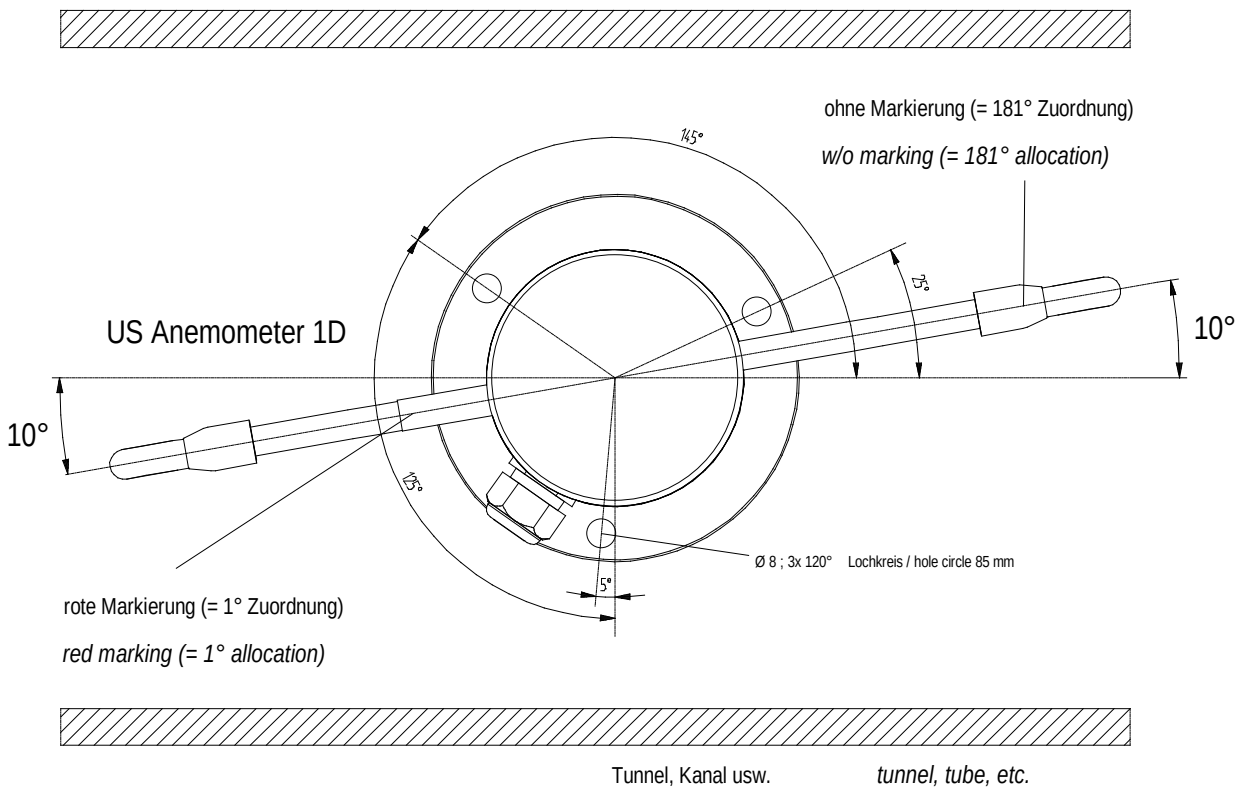

Figure 1: working direction

3.3 Mechanical Mounting: US- Anemometer 4.3865.xx.xxx und 4.3866.xx.xxx

The appropriate mounting is done by means of an anemometer flange.
For boring dimensions please refer to the dimension drawing (chapter 13).

- Working position: user-defined

For measurement both sensor arms have to point lengthwise to the main wind direction (tunnel direction), see chapter 3.2. working direction.

3.4 Mechanical Mounting: US- Anemometer 4.3867.xx.xxx

The appropriate mounting of the ULTRASONIC anemometer is done onto a tube socket of R1½" (Ø 48,3 mm) and ≥ 50 mm length. The inner diameter of the tube socket must be ≥ 40 mm, as the ULTRASONIC anemometer is electrically connected from below. See also dimension drawing chapter 13.

- Working position: vertical (Sensor arms: top)

After electrical connection (see chapter 3.5) the ULTRASONIC anemometer is fixed on the tube- resp. mast socket. The mechanical alignment of the instrument is carried out afterwards, see chapter 3.2 working direction.

The instrument is mounted by means of four hexagon socket screws (SW 4 mm) at the shaft.

3.5 Electrical Installation: US- Anemometer with Connector (4.3866… and 4.3867…)

The ultrasonic anemometer is equipped with a plug for electrical connection. A coupling socket (mating) is included in delivery. It is located in the lower part of the transport packing. A plastic fit-up aid for holding the bush insert while screwing it together with the coupling sleeve, is included in delivery.

- With model 4.3866.xx.xxx the plug is mounted on the housing side (see dimension drawing)

- With model 4.3867.xx.xxx the plug is installed in the anemometer base (see dimension drawing)

3.5.1 Connection, Cables, Cable preparation and Coupling socket Installation

Connection:
For pin assignment please refer to supplement „factory settings“.
(Examples see chapter 3.5.2)

Cables:
The cable must have the following properties:
8 cores; 0,5 to 0,75 mm² core cross-section for supply; min. 0,14 mm² core cross-section for data communications; 7- 8 mm cable diameter, resistant to ultraviolet rays, overall shielding.

Remark:
Optionally, a completely converted connecting cable can be included in delivery for the ultrasonic-anemometer (see accessories).

Cable preparation and Coupling socket Installation:

Coupling socket 211173 (or 507550) (Binder, Serial 423), EMC with cable clamp

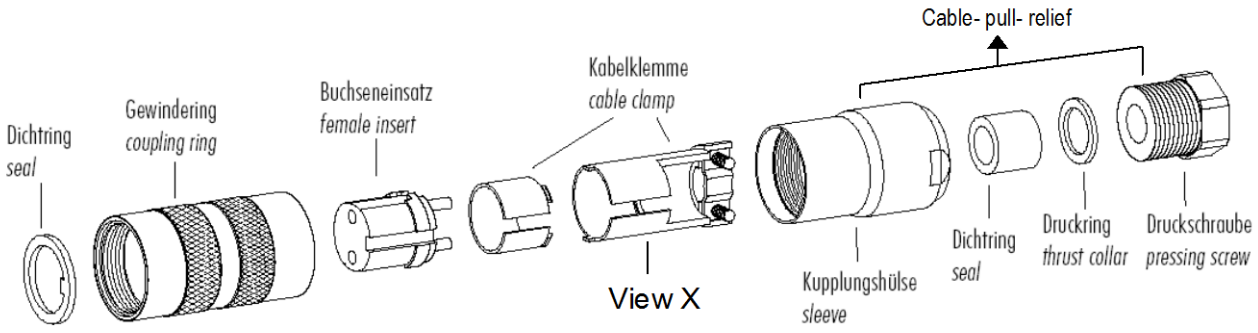

1. Stringing parts on cable acc. to plan given above.
2. Stripping cable sheath 20 mm
   Cutting uncovered shield 15 mm
   Stripping wire 5mm.

   Cable mounting 1
   Putting shrink hose or insolating tape between wire and shield.

   Cable mounting 2
   If cable diameter permits, put the shield backward on the cable sheath.
3. Soldering wire to the insert, positioning shield in cable clamp.
4. Screwing-on cable clamp.
5. Assembling remaining parts acc. to upper plan.
6. Tightening pull-relief of cable by screw-wrench (SW16 und 17).

Cable mounting 1

Viev X

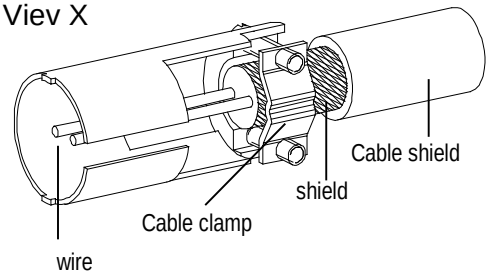

Cable mounting 2

Viev X

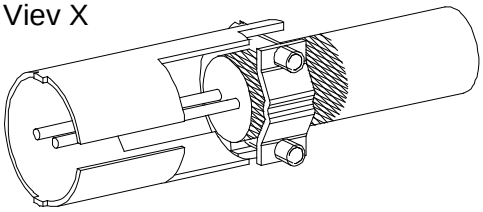

3.5.2 Connector Pin Assignment (Examples of Function)

Remark:

- For exact allocation of function please refer to supplement "Factory Settings"
- The pins 1 – 6 (incl.) are galvanically isolated from the supply voltage and from housing.

• Serial Interface, Full-duplex			View of solder terminal of coupling socket
Pin	**Allocation**	**Function**	
1	RXD-	Serial interface	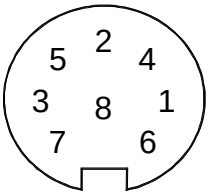
2	TXD-	Serial interface	
3	ADIO	Function not preset	
4	RXD+	Serial interface	
5	TXD+	Serial interface	
6	AGND	Analogue ground	
7	AC/DC	Supply, reverse-polarity protected	
8	AC/DC	Supply, reverse-polarity protected	
⏚	Shield		

• Serial Interface, halve-duplex and analogue outputs			View of solder terminal of coupling socket
Pin	**allocation**	**Function**	
1	WG	Analogue output wind speed	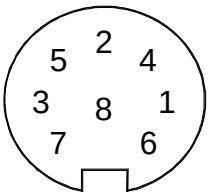
2	TXD- / RXD-	Serial interface	
3	ADIO	Function not preset	
4	WR	Analogue output wind direction	
5	TXD+ / RXD+	Serial interface	
6	AGND	Analogue ground	
7	AC/DC	Supply, reverse-polarity protected	
8	AC/DC	Supply, reverse-polarity protected	
⏚	Shield		

• Serial Interface, halve-duplex and analogue inputs			View of solder terminal of coupling socket
Pin	**Allocation**	**Function**	
1	0-9,96V	Analogue input	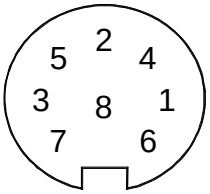
2	TXD- / RXD-	Serial interface	
3	0-9,96V	Analogue input	
4	0-9,96V	Analogue input	
5	TXD+ / RXD+	Serial interface	
6	AGND	Analogue ground	
7	AC/DC	Supply, reverse-polarity protected	
8	AC/DC	Supply, reverse-polarity protected	
⏚	Shield		

3.6 Electrical Installation: US- Anemometer with Cable (4.3865….)

The ultrasonic anemometer is equipped with a connected cable by means of a screwed cable gland. The cable end is open. The core ends are marked by means of cable rings.

3.6.1 Cable Pin Assignment (Examples of function)

Remark:

- For exact allocation of function please refer to supplement "Factory Settings"

- The pins 1 – 6 (incl.) are galvanically isolated from the supply voltage and from housing.

• Serial Interface, full-duplex			
Pin	**Colour code**	**Allocation**	**Function**
1	White	RXD-	Serial interface
2	Green	TXD-	Serial interface
3	Black 1	ADIO	Function not preset
4	Brown	RXD+	Serial interface
5	Yellow	TXD+	Serial interface
6	Black 2	AGND	Analogue-ground
7	Black 3	AC/DC	Supply, reverse-polarity protected
8	Black 4	AC/DC	Supply, reverse-polarity protected
⏚	Green/yellow	shield	

• Serial Interface, half-duplex and analogue outputs			
Pin	**Colour code**	**Allocation**	**Function**
1	White	WG	Analogue output wind velocity
2	Green	TXD- / RXD-	Serial interface
3	Black 1	ADIO	Function not preset
4	Brown	WR	Analogue output wind direction
5	Yellow	TXD+ / RXD+	Serial interface
6	Black 2	AGND	Analogue ground
7	Black 3	AC/DC	Supply, reverse-polarity protected
8	Black 4	AC/DC	Supply, reverse-polarity protected
⏚	Green/yellow	shield	

• Serial Interface, half-duplex and analogue inputs			
Pin	**Colour code**	**Allocation**	**Function**
1	White	0-10,0V	Analogue input
2	Green	TXD- / RXD-	Serial interface
3	Black 1	0-10,0V	Analogue input
4	Brown	0-10,0V	Analogue input
5	Yellow	TXD+ / RXD+	Serial interface
6	Black 2	AGND	Analogue ground
7	Black 3	AC/DC	Supply, reverse-polarity protected
8	Black 4	AC/DC	Supply, reverse-polarity protected
⏚	Green/yellow	shield	

4 Maintenance

As the instrument does not have moving parts, i.e. is not subject to wear during operation, only minimal servicing is required. Cleaning can be carried out as required using non-aggressive cleaning agents in water and a soft cloth during routine checks.

Attention:

During storage, installation, de-installation, transport or maintenance of the anemometer it must be ensured that no water gets into the shaft and connector or cable gland of the anemometer.

5 Calibration

The ultrasonic anemometer does not contain any adjustable components such as electrical or mechanical trimming elements. All components and materials used show invariant behaviour in terms of time. This means that no regular calibration is required due to ageing. Errors in measured values are only caused by mechanical deformation of the transformer arms and associated changes in measurement path lengths.

The measurement path length is calibrated to 200 mm. If the given virtual-temperature deviates from the actual outdoor temperature by more than 6 Kelvin, it is assumed that the measuring arms are mechanically deformed. In case of any change in the measurement paths of the anemometer the manufacturer should be consulted regarding recalibration.

Important:

Mechanical deformation of the measuring arms results in errors in the measured values. A recalibration is necessary.

6 Warranty

Damage caused by improper handling or external influences, e.g. lightning, do not fall under the warranty provisions. The warranty entitlement expires if the instrument is opened.

Important:

The ultrasonic anemometer must be returned in the original packaging as the warranty entitlement otherwise expires with mechanical damage, e.g. deformation of measuring arms.

7 Functional description

The functioning of the ULTRASONIC instrument is described below. Due to the limited number of plug connections some functions exclude the simultaneous operation with other functions. Such dependency is described in each case. There are also restrictions regarding the functional definition of the connecting cable. This is due to the double assignment of individual PINs.

7.1 Serial communication

The ULTRASONIC provides an RS485 / RS422 interface for serial communication. It can be operated either in full or half duplex mode and at different baud rates.
A standard terminal program, for ex., can be used for communication with the ULTRASONIC. With a Windows-based operating system Hyper Terminal is included in the scope of supply. It has to be installed subsequently if required.

The manufacturer, generally, is not aware of a possible use of the Ultrasonic Anemometer in a bus formation. Therefore, the instrument has a wave terminating resistor, which can be connected by the software, for half-duplex-operation. See command: BT (bus timing).

When starting the ULTRASONIC, the communications parameters are output to the serial interface. Output takes place at 9600.8N1. The baud rate, the duplex modus and the ID are output:

Example:
THIES ULTRASONIC
!00BR00005
!00DM00001

The ULTRASONIC starts with ID 0, with a baud rate of 9600.8N1 and full duplex mode.

7.1.1 Duplex mode

Duplex mode decides the type of physical connection of the serial interface. In full duplex mode the send and receive signals are each transmitted via separate pairs of cables. This means it is possible to send and receive signals at the same time.
In half duplex mode transmission of the send and receive signals is via the same pair of cables in the time division (successively), see **Command DM**.

For a bus operation in the half-duplex-mode (RS485), where the ULTRASONIC, in general, is operated as “slave”, it is necessary to switch the line-transmitter into the “high–impedance-state” during the intermission, so that the replies of the other bus parties are not suppressed.

It might be important with point-to-point-connections in the full-duplex-mode (RS422), depending on the disturb-ratio on the communication lines, that the line-transmitter remains active during the intermissions. So, a maximum differential input level leads to a maximum signal/noise ratio.

A half-duplex-mode can be selected via the command DM (duplex mode). With this mode, on principle, the line-transmitter is switched on only when sending. For the full-duplex-operation there are two modes: one for bus operation (RS485), where the line-transmitter is controlled as in half-duplex mode, and another one (RS422), where the line-transmitter remains active even in case of reception. See command DM.

For the ULTRASONIC there are restrictions on the parameter combination or function of the terminals depending on the transmission type selected. Due to the limited number of plug connector contacts multiple assignment of the connections are necessary. The following table shows the functional options for the modes full and half duplex.

Full duplex mode	Half duplex mode
Independent telegram output possible (see Command TT)	Independent telegram output possible effective from software version V3.10. Telegram output is activated one minute after instrument start or respectively after setting the commands
Bus mode not possible (DM=00002), Bus mode possible (DM=00001)	Bus mode possible (DM=00000)
No output of analogue values to PIN RXD- and RXD+	Output of analogue values possible
No reading of ID from external PINs (see **Command XI**)	Readin of ID from external PINs possible (see **Command XI**)
Analogue inputs to PINs RXD- and RXD+ not possible. (see **Command *AA***, **Command AB)**	Analogue inputs to PINs RXD- and RXD+ possible (see **Command *AA***, **Command AB**)
Heating control via PIN ADIO possible	Heating control via PIN ADIO possible

Table 1: Restrictions in full and half duplex mode

7.1.2 Response Delay

With the serial communication please take into consideration that the ULTRASONIC responds immediately to arriving telegrams. The response time of the instrument is in the lower range of milliseconds. Possibly, the delay between receiving signal and sending signal might be too short for some interface converters. It is possible that, within this time period, the interface converter has not yet switched over from the mode 'sending' to the mode 'receiving'. This might lead to absurd telegrams.

In order to avoid this effect, the ULTRASONIC has the parameter RD (response delay). With this parameter the response is additionally delayed, on receipt, by the selected value in milliseconds.

7.1.3 General telegram structure

For serial communication the ULTRASONIC has a fixed telegram format which also permits communication in bus mode. It has the following form:

NNBB<cr> <cr> stands for Carriage return (Enter key)

for a data enquiry or

NNBBPPPPP<cr> <cr> stands for Carriage return (Enter key)

for a parameter change.

The individual letters have the following meaning:

NN: Two-position ID of the ULTRASONIC. It can be selected in the range from 00 to 99. The presetting is the ID '00': see also **Command ID** and **Command XI**

BB: Two-position command. A complete list can be found in section Command list.

PPPPP: If a new parameter is to be set, the parameter is changed with a 5-position value. The parameter is always right-justified; i.e. it thus has to be padded from the left with zeros.
Example:
Telegram No. 4 is to be interrogated. The relevant command is:

00TR00004<cr> <cr> stands for Carriage return (Enter key)

The prerequisite is that the ULTRASONIC ID has the value '0'.

Example:

With the command

00BR<cr> <cr> stands for Carriage return (Enter key)

the selected data record for the baud rate is returned.

!00BR00005

Remark:
The receiving buffer of the ULTRASONIC can be cleared by sending a carriage return <CR>. If the ULTRASONIC possibly has invalid characters in the receiving buffer, this buffer can be processed by sending a carriage return. In this case, it is advisable to send a carriage return at the beginning of the telegram, for example:

<cr>00BR<cr> <cr> stands for Carriage return (Enter key)

7.1.4 Return values of ULTRASONIC

After a valid command has been input, the ULTRASONIC sends acknowledgement, e.g. acceptance of the parameter or output of a data telegram.

For a standard command the response starts with a '!', followed by the ID and the parameter value.

If the input command is TR or TT, the ULTRASONIC transmits a data telegram as the response.

If the command cannot be processed for a certain reason, the instrument transmits a telegram with the error code 'CE' (Command Error). The meanings of the values for CE are summarised in **Table 2: Return values with incorrect interpretation of command**:

Value output in CE telegram	Meaning
8	Incorrect access mode
16	Parameter not in valid range
4 or 32	Violation regarding parameters of other commands

Table 2: Return values with incorrect interpretation of command

7.1.5 Access Mode

For configuration the ULTRASONIC has a set of commands which determine behaviour in terms of the propagation time. The commands are broken down into three levels:

- Enquiry Mode
- User mode
- Configuration mode

Enquiry mode:
This mode comprises commands, which do not influence the parameters of the ULTRASONIC. They include for example, output of the system status and interrogation of the data telegram with TR.

User mode:
This mode comprises commands, which affect the behaviour of the ULTRASONIC. These parameters can be changed by the user. The system behaviour of the instrument is adapted with these commands. This group of commands includes e.g. settings for data transmission and averaging.

Configuration mode:
This mode comprises commands, which were set when adjustment of the instrument was performed at the factory. They can be equated with calibration. These parameters must not be changed.

To distinguish between commands of the three groups when parameterising the ULTRASONIC the instrument is equipped with an access key KY. Inputting of the key accesses the individual levels. Access to commands at a higher level includes access to commands at a lower level.

Access key	Response from ULTRASONIC	Command level
00KY00000	WRITE PROTECTED !00KY00000	Enquiry mode (preset)
00KY00001	USER ACCESS !00KY00001	User mode
00KYxxxxx	CONFIG ACCESS!00KYxxxxx	Configuration mode Key must be asked from the manufacturer

Table 3: Access key for different command levels

After the access key has been changed, the ULTRASONIC transmits a response which contains not only the parameter input but also the access mode.

After parameters have been changed with the key '00001' or 'xxxxx', the ULTRASONIC must be reset to the initial position with the command 00KY00000.

In case of power supply interruption the instrument is reset automatically to the query mode.

Example:

00KY00001	
USER ACCESS	Response from ULTRASONIC
!00KY00001	Response from ULTRASONIC
00AV00005	Change in averaging time
00KY00000	
WRITE PROTECTED	Response from ULTRASONIC
!00KY00000	Response from ULTRASONIC

7.1.6 Baud rate

The baud rate is used to select the transmission speed via the RS485. The parameter range is from 1200 baud to 921.6 kBaud.
To prevent accidental reprogramming of the baud rate over 115.2 kBaud, the baud rates above 115.2 kBaud are accessed with the command BX.
Reprogramming of the baud rate with the command BR has an immediate effect on the ULTRASONIC. After the dispatch of a command, the user program used must be set to the corresponding baud rate.
When using a baud rate in the extended range (230400 baud .. 921600 baud) the ULTRASONIC includes an additional safety mechanism, which prevents unintentional adjustment of the baud rate. When the command BX is used, the ULTRASONIC immediately switches over its baud rate but does not store this change. With each restart the ULTRASONIC starts with the old baud rate. To store the changes the baud rate of the PC must be set to the new speed, and the same command transmitted to the ULTRASONIC once again. After transmission the ULTRASONIC acknowledges the command with the output 'Baud rate saved'.

Example:
The baud rate is to be changed to 962100 baud:

Command:	Response ULTRASONIC	Comment
00KY00001	USER ACCESS !00KY00001	Permit access
00BX00103	For saving change baud rate and insert command again	
		Change baud rate of PC to 921600 here
00BX00103	Baud rate saved !00BX00103	

7.1.7 Instrument ID

The instrument ID specifies the address to which the ULTRASONIC is to respond during serial communication. The instrument ID lies in the range from '00' to '99'. The preset ID is '00'. Every telegram from the ULTRASONIC starts with the ID set. Under certain conditions this provides for bus mode: see Bus mode.
The ID is reprogrammed with the command 'ID'. The new ID of the ULTRASONIC is specified as the parameter. After the change has been made, the ULTRASONIC immediately responds to the new address.

Example:
00KY00001

USER ACCESS	Response from ULTRASONIC
!00KY00001	Response from ULTRASONIC
00ID00004	ID changed to address 4
!04ID00004	ULTRASONIC confirms new ID
	The ULTRASONIC responds to the new ID '04' now, i.e. including after a restart
04AV	Interrogation of averaging time with new ID
!04AV00005	Return of averaging time

It is also possible to specify the ID on start-up via the external PINs WV/RXD-, WD/RXD+ and ADIO. For this purpose the parameters of the commands AA, AB, AC and XI must be set properly: see **Command AA**, **Command AB**, **Command AC**, **Command XI**.

7.1.8 Bus mode

The concept of ID-based communication allows the ULTRASONICs to be operated in a bus system. The prerequisites for this are:

- Half duplex mode.
- Different IDs of the individual bus users.
- master-slave structure, i.e. there is a device in the bus (control, PC ...) that performs cyclic enquiry of the data of the individual ULTRASONICs and possibly parameterises the ULTRASONICs.

In bus mode there are no restrictions on parameterisability and program upload. A station can also be provided with a new program in bus mode for a specific purpose. With an update a program update must be performed for every ULTRASONIC.

In bus mode it is recommended not using an ULTRASONIC with the ID '00' as this ID is reserved for devices that are integrated in the bus for the first time.

7.2 Analogue and digital I/O

In addition to output of the data via the serial RS485, the ULTRASONIC can also output the data using an analogue interface. These outputs can also be optionally switched as analogue inputs which read in an external voltage of 0.. 9.96 V, perform digital conversion and output this via the user-specific telegram.
The ULTRASONIC is also equipped with the cable ADIO, which includes digital output functions in addition to the analogue input.

7.2.1 Analog inputs

The signals WV/RXD-, WD/RXD+ and ADIO of the connector can be switched as analogue inputs under certain conditions. WV/RXD- and WV/RXD+ are then only available as inputs when half duplex mode is selected and the ports have been set accordingly via the commands AA, AB and AC. See **Command AA**, **Command AB**, **Command AC**.
The function of the pin ADIO is independent of duplex mode and can be switched as an analogue input at any time.
The measured values read-in can be output with the user-specific telegram: see User-specific telegram. The input voltage range is 0…+10,0 V, the sampling rate can be set in many ranges by the command AU (analogue Update rate). The minimum converting period is 2,5 msec per channel. If, for ex., all three channel are configured as analogue inputs, the maximum sampling rate is 1/7,5 ms = approx. 133 Hz.
The parameter AU gives the sampling rate in ms. The time period of a sampling for all selected analogue channels is the value of AU multiplied by the number of channels.

The scanning rate can be changed through the command AU. The parameter gives the scanning interval in ms. The scanning rate for all analogue channels is the value of AU, multiplied by the number of channels.

The parameters AY, AZ; BY, BZ; CY, CZ are available for the scaled output of the analogue measuring values. By means of these parameters the measuring range (0..10,0 V) can be converted into a linear output.
The Y-parameters always state the value corresponding to 0V, the Z-parameters state the value corresponding to 10,0 V. As the command interpreter of the ULTRASONIC facilitates no negative numbers and no commas the scaling values must be converted before input.

The abbreviation SKAW means “scaled output value”. This is the value which is output in the telegram after conversion of the measuring value.

The parameter value that has to be entered with AY, AZ; BY; CY, CZ is to be calculated as follows:

Parameter value = 30000 + (SKAW*10)

Example:
A temperature sensor is to be connected to PIN ADIO. The sensor has the following characteristics:
0,0 V = -40°C
+10,0V = 80°C

The parameter CY describes the measuring value for 0V. It is to be calculated as follows:
Command value = 30000 + (-40*10) = 29600
Through the command 00CY29600 the lower value is described.

The parameter CZ describes the measuring value for 10,0V. The output value for measuring value +10 V shall be +80°C. The conversion is as follows:
Command value = 30000 + (80*10) = 30800
Through the command 00CZ30800 the upper value is defined.

For the output of the data values the user-defined telegram is applied. If the measuring value of the ADIO-PIN shall be output with sign, two pre-dots, and one post-dot sign the definition
00UT@21,05,1,1@
must be added. See also **User-specific telegram**.

For further information see
Command AA, **Command AB**, **Command AC**, **Command AY**, **Command AZ**, **Command BY**, **Command BZ**, **Command CZ**.

7.2.2 Analogue outputs

As an additional option the analogue outputs WV/RXD- and WD/RXD+ offer the possibility of outputting the wind velocity and wind direction as analogue values both as a voltage and current value. It is also selectable if a constant offset of 20 % of the upper range value is output with the current- or voltage output at measuring value 0. This realizes the interfaces 4..20 mA. See the table for the possible combinations.

	Parameter SC=0	Parameter SC=1
Parameter AN=0	0..10 V	2..10 V
Parameter AN=1	0..20 mA	4..20 mA
Parameter AN=2	No output	No output

P AA= 0; AB = 0

Table 4: Config. of analog outputs WV/RXD- and WD/RXD+ with parameters AN and SC

7.2.3 Scaling of analog wind velocity

With the analog wind velocity the user has the option of specifying the velocity for the terminal value of the measuring range with the command AR. In the preset value the scaling is 0..60 m/s: see **Command AR**.
The terminal scaling value is specified in m/s. For example the command 00AR00030 scales the analog output range of 0..30 m/s wind velocity. With a setting of 2..10 V this results in the following:

WV = 0 m/s = 2 V and
WV = 30 m/s = 10 V

See also **Command AR**.

7.2.4 Output of the analogue Wind Direction

The measured angle of the ULTRASONIC anemometer is 0° for calm, 1° for wind from the north and 181° for wind from the south.

The value can be output via the analogue wind direction. In addition, it possible to deliver a combination of wind velocity and wind direction via the output, see **Command AO**.

Due to the restriction of the measurable angle the wind direction output can be used for the simultaneous output of wind direction and wind velocity.

Combined output of wind direction and wind velocity.
Inn case of 0 m/s wind velocity exactly half of the analogue value is output (5V; 10mA; resp.6V; 2mA).

A current output 0..20 mA applies for:
0..10 mA = 20..0 m/s (from northern direction)
10..20 mA = 0..20 m/s (from southern direction)

A current output 4..20 mA applies for:
4..12 mA = 20..0 m/s (from northern direction)
12..20 mA = 0..20 m/s (from southern direction)

A voltage output 0..10 V applies for:
0..5 V = 20..0 m/s (from northern direction)
5..10 V = 0..20 m/s (from southern direction)

A voltage output 2..10 V applies for:
2..6 V = 20..0 m/s (from northern direction)
6..10 V = 0..20 m/s (from southern direction)

7.2.5 Output of the analogue Virtual Temperature

The analogue virtual temperature can be output at PIN 3 (ADIO). The function of PIN 3 (ADIO) is set by command AC, refer also to **Command AC**. The scaling of the virtual temperature is permanently set. The output signal (voltage, power) is scaled as follows: -40°...+80°C.

7.3 Data acquisition

The main function of the ULTRASONIC firmware is data acquisition and preparation. For data acquisition sound impulses are transmitted by the sensors in a clockwise direction and received by the sensor opposite. The propagation time measured is a measure of the velocity. A measuring cycle is complete when every sensor has performed transmit and receive once. The complete data record is then time-stamped and passed on to the next level. After the plausibility check the individual components are calculated and, depending on the setting, either output (see **Instantaneous values)** or written to the averaging buffer (see averaging) prepared and output.

7.3.1 Instantaneous values and output of raw measured values

The output of instantaneous values is generally a special case. Due to the high acquisition speed for the measured values averaging of the data is sensible in most cases. If instantaneous values are to be output, averaging must not be switched on. The parameter AV should be set to '0': see **Command AV**.
The OR parameter is used to adjust the output rate with independent output. With a value of '0' a telegram is output whenever a new measured value is determined. If the baud rate is set high enough and a short user-specific telegram is defined in this mode, the raw measured values of the ULTRASONIC can be output.

Note:
The user-specific telegram contains a data value 'measured value counter' (index 8), which is incremented with every new measured value. If the difference of the measured value counter between two output telegrams is one, every measured value is output. In the standard setting the acquisition of measured values takes place every 20 ms.
To raise the acquisition of measured values to a maximum level (a new measured value approx. every 1,2 ms), the following steps must be performed:

Switch off plausibility	00PC00000
Set measuring delay to zero:	00MD00000
Automatic measuring adjustment off:	00MA00000

All measured values of the ULTRASONIC can now be output if the high baud rate is high enough. It is recommended creating a user-specific telegram and having it independently output by the ULTRASONIC (00TT00006). The data field Time stamp (index 5 in user-defined telegram) shows the time of the measured value relative to system start-up in ms.

7.3.2 Averaging

Given the high data acquisition rate averaging is to be recommended in most cases. The averaging period is freely selectable from 600 ms to 100 minutes within wide limits. See also '**Table 7: Adjustment of averaging periods with parameter AV**' under '**Command AV**'.
It is a basic rule that only valid values are written to the averaging puffer. The size of the buffer is not determined by the number of data records but by the difference in the time stamp between the first and last data record. As a result any missing measured values do not influence the averaging result. The content level of the averaging buffer is shown in the status value of the ULTRASONIC. It is the ratio between the memory actually occupied and the maximum required memory (calculated value). Output is performed in eight or 16 steps: see Status information.

Vectorial Averaging is integrated in the Ultrasonic 1D.

Vectorial averaging involves the wind direction for averaging of the wind velocity, and wind velocity for averaging of the wind direction.
Both averaged variables, wind velocity and wind direction, thus each undergo evaluation with the other measured variable.
This averaging procedure is very suitable e.g. for measuring and evaluating the propagation of pollutants.

7.3.3 Standard deviation

Calculation of the standard deviation is another feature offered by the ULTRASONIC. The standard deviation values are determined for the wind velocity, wind direction and virtual temperature with an averaging time > 1sec. Values are calculated according to the following formula:

$$Y = \sqrt{\frac{1}{n}\sum_{i=0}^{i<n}\left(\overline{M} - Xi\right)^2} \qquad \text{where} \quad \overline{M} = \frac{1}{n}\sum_{i=0}^{i<n} Xi$$

Standard deviation is switched on with the command "DE00001". When using standard deviation the averaging memory used is limited to 2000 measured values. Otherwise there are no restrictions when using standard deviation. Which calculated values are available when using standard deviation can be found under Available measured values and Data formats in the section User-specific telegram.

In the presetting calculation of the values for standard deviation is switched off. It must be switched on explicitly with the command 00DE00001.

7.3.4 Measurement in Burst Mode

Another measuring method is measurement in burst mode. Here the ULTRASONIC performs measurement and stores the measured values in the internal data memory. If the internal data memory is full, or the required number of measuring values is achieved, the ULTRASONIC outputs the measured values via the serial interface. Burst mode can be used to register measured values at a high speed and to output them at a lower baud rate. In burst mode max. 40,000 measuring cycles can be stored. The memory depth can be selected with parameter BS, see **Command BS**.

Moreover, the burst mode offers the possibility of recording and outputting data, as well, before the trigger event. This function is determined by the parameter BP. BP indicates the time in ms when the data recording starts before the real trigger event.

Burst mode is activated with the command 00AC00016 or 00AC00017, see **Command AC**. Here the PIN 3 (ADIO) is used as the trigger signal to start measurement.

In the burst mode it is also possible to record the analogue data of the channel WG/RXD+ as well. For this, however, the instrument must be switched into halve duplex mode.

No data is output during measurement in burst mode. Once measurement has finished, the measured data is output in the output telegram selected, see **Command TB**.

On activating the burst mode the internal milliseconds counter is reset. After activation the burst mode must be started within 49 days in order to avoid a timer overflow. After termination of burst mode the trigger time is stated with the data output. During the data output a telegram „trigger“ is displayed in place of the trigger signal. This output indicates the trigger time.

Parameterisation of burst mode

Before the start of burst mode system parameters can be adjusted for the acquisition of measured values:

- The number of measured values used is selected with the parameter BS.
- To achieve a maximum measuring speed the parameter MD can be switched to 0 and MA to 0, see **Command MA** and **Command MD**. This switches on the maximum measuring frequency.
- It may be sensible to switch off the plausibility filter with 00PC00000, see **Command PC**.

Start burst mode

- Leave PIN 3 (ADIO) open or connect to 5 V potential.
- Select the required output telegram with command TB, see **Command TB**.
- Select the required buffer depth for measurement, see **Command BS**.
- Select the speed for acquisition of the measured values with MD and MA.
- Set the value for the pre-trigger by BP; for ex. the parameter PB00100 records the data 100 ms before the trigger event, as well.
- Poss. switch the plausibility check off with command PC.

- Activate burst mode with command 00AC00017.

  The ULTRASONIC will output the text:

  Burst mode init.

  Starts when ADIO goes low.
- Measurement can now be started via the PIN 3 (ADIO). Once the measured value buffer is filled, the data will be output automatically. It is not possible to halt output.

Working with an additional analogue measured value

Burst mode is capable of registering an additional analogue measured value, storing and outputting it with the telegram. To output the analogue measured value it is necessary to create a user-defined telegram in which the analogue measured value is also output.

Only the measured value at PIN 4 can be acquired additionally as analogue value.

To include the analogue measured value from PIN 4 in the burst measurement, configure the system as follows:

- Switch the system to half duplex mode, see **Command DM**.
- Switch PIN 4 as the analog input with command AB00001, see Command AB.
- Set the value for the pre-trigger by BP; for ex. the parameter PB00100 records the data 100 ms before the trigger event, as well.
- Format the analog value with commands BY and BZ, see **Command BY**, **Command BZ**.
- Adjust the sampling speed of the input with command AU,
  see **Command AU**.
- Configure a user-specific telegram, see **User-specific telegram**.
- Configure burst mode as described above.
- Set the output telegram to TB00006.

Examples of burst mode configuration

Simple burst mode configuration

00KY00001	
00TB00002	(VDT output telegram)
00BS00100	(100 measurements in burst mode)
00AC00016	(Activate burst mode)

Burst mode configuration with maximum measuring speed, without plausibility check and scientific output telegram

00KY00001	
00TB00012	(Data output after measurement: Scientific output telegram)
00BS00100	(100 measurements in burst mode)
00BP00100	Recording of data 100 ms before the trigger event
00MD00000	(No delay between measurements)
00MA00000	(Switch-off of automatic measuring speed adjustment)
00PC00000	(Switch-off of plausibility)
00AC00016	(Activate burst mode)

Burst mode configuration with maximum measuring speed, with plausibility check, analog measured value and user-specific output telegram

00KY00001	
00DM00000	(Switch to half duplex mode. ATTENTION!! Adapt wiring of RS485!!!)
00KY00001	
00AB00001	(Activate analogue input)
00TB00006	(Data output after measurement: User-specific output telegram)
00UT@12,6,2@,@13,6,2@,@63,5,0@,@7,9,0@\0d	
	(Configuration of user-specific telegram with Wind speed, Wind direction, analogue measuring value, time stamp)
00US00002	(Storage of user-specific telegram)
00AU00001	(Update of analog inputs to maximum speed (max. 3 ms))
00BS00100	(100 measurements in burst mode)
00BP00100	Recording of data 100 ms before the trigger event
00MD00000	(No delay between measurements)
00MA00000	(Switch-off of automatic measuring speed adjustment)
00PC00007	(Switch-on of plausibility)
00AC00016	(Activate burst mode)

Ending burst mode

- End burst mode with command 00AC00000
- Activate required output telegram with command TT

Restrictions in burst mode

Measurement in burst mode is subject to the following restrictions:

- No standard deviations and covariance's are calculated in burst mode.
- The mean value buffer is deleted after burst mode.
- Burst mode does not function in bus mode.
- When using the analog input, the first two analog measured values may contain incorrect values depending on the setting. Such behaviour is due to technical reasons and cannot be prevented.
- In the period of the pre-trigger the recorded analogue values are invalid.

7.3.5 Gust Acquisition

With preset averaging the ULTRASONIC acquires mean values of wind velocity and wind direction. It is expedient, with some application, to output the maximum wind velocity within the mean value period and the respective wind direction.

The maximum wind velocity in the mean value buffer is acquired through the command GU ('gust'). The length of gust is set in 100 ms increments through the parameter of the command GU. It ranges from 100 m to 3 sec. The parameter value 0 deactivates the gust measurement.

Example

00GU00010	Activates the gust acquisition. The length of gust I 1 second.
00GU00000	Deactivates the gust measurement.

The measurement values of the gust can be output only by means of the user-specific telegram. see **User-specific telegram**.

Example:

00AV00003	one minute averaging
00GU00030	Length of gust is 3 seconds (WMO-recommendation for gust length)

00UT\02@08,04,01@ @09,03@ @12,05,01,01@ @38,04,01@ @39,03@ @27,02,02@*@36,01,27,02,02@\0D\03

User-specific protocol. Query through TR00006 or TT00006

VDT-telegram plus gust

(STX) WV WD VT WV_gust WD_gust status*check sum(CR)(ETX)

00UT00002	storing of the user-specific telegram
00TT00006	automatic output of the data telegram

The measurement values of the gusts have the following characteristic:

- The preset time for the gust must be less than the preset averaging period.
  See **Command AV**.
- If the period of the mean values is less than or even the period of gust, zero is output for the wind velocity and wind direction of the gust.
- In case the wind velocity of the gust is < 0,1 m/s, 0 is output for the wind direction.
- If the calculated wind direction is 0, it is set to 360.

7.4 Serial data output

The transmission of data via the RS485 interface is known as serial data output. Two modes are available for data transmission:

- Independent transmission of data
- Transmission of data via interrogation telegram

Independent transmission of the data is selected using the command 00TT000XX, with XX standing for the relevant telegram number. In this case the ULTRASONIC transmits its data cyclically in the repeat rate selected with the parameter OR.

7.4.1 Data enquiry

The command TR is used for data enquiry via the ULTRASONIC. The command has no access protection. After processing the command the instrument sends back the appropriate response telegram. The time between the last character in the request telegram and the first character in the data telegram is < 0.5 ms.
The user-defined telegram and the telegrams, as for the definitions described under 'Fixed telegram formats‘, are available as data telegrams.

7.4.2 Independent telegram output

Independent telegram output is selected using the command TT. After a valid telegram type has been input, the ULTRASONIC independently transmits the data telegram selected. The transmission interval is set in ms using the command OR. The telegram is transmitted every 100 ms as standard. If the baud rate selected does not allow the output cycle to be observed (the time for data transmission is greater than the interval time), it is possible that telegram output cannot be carried out.

Attention:

An independent telegram output in full-duplex mode is possible, and effective from software version V3.10 also in half-duplex mode.

7.4.3 Fixed telegram formats

A number of predefined telegrams are available to for the independent output of telegrams (commands TT) and data request (Command TR). The detailed structure is described in 'Appendix 1 Predefined data telegrams'. A reference list of telegram formats can be found in '**Table 5: List of predefined data telegrams**'.

Telegram name	Telegram number	Telegram structure
VD	00001	(STX)gg.g ddd*cc(CR)(ETX)
VDT	00002	(STX)gg.g ddd ttt.t ss*cc(CR)(ETX)
V4DT	00003	(STX)ggg.g ddd ttt.t v ss*cc(CR)(ETX)
NMEA V 2.0	00004	$WIMWV,ddd.d,R,ggg.g,v,A*xx(CR)(LF)
Standard deviation	00005	(STX)vv.v ddd.d ddd ttt.t hhh uuu.u ss*cc(CR)(ETX)
User-specific	00006	The user-specific telegram is output (see chapter 7.4.5)
Vx, Vy	00007	(STX)aaa.a;bbb.b;ttt.t;ss;cc(CR)(ETX)
VD- Variant 1	00008	(STX)gg.g ddd*cc(CRLF)(ETX)
VDT- Variant1	00009	!iivvvdddttttwf(CR)
VDT- Variant2	000011	See appendix (chapter 10)
Scientific telegram	000012	See appendix (chapter 10)
VDT- Variant3	000013	See appendix (chapter 10)

Table 5: List of predefined data telegrams

Declaration:

v: wind velocity (see **Command OS**)
h: standard deviation of wind velocity
d: wind direction
t: temperature
u: standard deviation of temperature
s: status byte
c: Check sum Type 1 (EXOR link)
v: identifier for scaling of wind velocity (K, N, M, S = km/h, Knots, m/s, mph)
a: wind velocity in X-direction (east -> west)
b: wind velocity in Y-direction (north -> south)
w: Status byte Variant 1
f: Check sum Type 2
i: Instrument ID

7.4.4 Generation of check sum

Depending on the output telegram two different check sums are generated; type 1 resp. type 2.

7.4.4.1 Type 1

The check sum is the result of the byte wise EXOR link of the bytes output in the telegram.
The EXOR link encompasses all bytes between the telegram start character "STX", or "$" with the NMEA telegram and the byte "* " as the identifying character for the start of the check sum.
The bytes "STX" or "$" and "*" are thus not taken into account for calculation of the check sum!

7.4.4.2 Type 2

The check sum is the result of the byte wise EXOR link of the bytes output in the telegram without the '!' character at the beginning of the telegram.
With the resulting check byte, high- and low-nibbles are linked, added by the value 48 and are output as a single ASCII-value.

7.4.5 User-specific telegram

The ULTRASONIC offers the user the option of specifying his own telegrams. A formatted text can be used to output the internal measured and status values of the ULTRASONIC. Over 25 different values are available for output.
The user-defined telegram with the telegram number 6 is output. For example, the input of 00TR00006 prompts the ULTRASONIC to output the user-defined telegram.
The commands UA, UT, UR and US are available to define the user-defined telegram. See here also: **Command UA**, **Command UR**, **Command US**, **Command UT**. These commands can be used to create a new telegram, extend an existing telegram, delete telegram information and lastly, to store the telegram definition in the EEPROM.
The measured values are selected and the format specified in the formatted text. **Table 6** shows a list of the available data.
The formatted text also includes the option of outputting a fixed character string. The definition

00UAHello World\0d<cr> <cr> stands for Carriage return (Enter key)

generates the telegram output

Hello World

7.4.5.1 Generation of a new, user-specific telegram

The command UT is used to overwrite an existing telegram in full. For example with the command:

00UTWind velocity: @8,6,2@m/s\0d<cr> <cr> stands for Carriage return (Enter key)

the output

Wind velocity: 001.64m/s

is returned with the telegram output. (The prerequisite is of course that the current wind velocity is 1.64 m/s).

7.4.5.2 Attachment of definitions

The command UA can be used to attach new definitions at the end. Here it must be borne in mind that the attachment of definitions may require more memory than telegram definition using the command UT.

Internally the ULTRASONIC is equipped with over 30 definition blocks. Each of these blocks can accommodate the definition of one data value or 5 fixed characters. It must be borne in mind that once a block has been defined, it cannot be extended.

The user-specific telegram can receive up to 28 definitions. One definition can include 1 to 5 characters, i.e. even a single semicolon covers a definition.

Example:
The definition

00UAHELLO<cr> <cr> stands for Carriage return (Enter key)

generates a new block which contains the character string HELLO.

The definitions
UAH<cr> <cr> stands for Carriage return (Enter key)
UAE<cr> <cr> stands for Carriage return (Enter key)
UAL<cr> <cr> stands for Carriage return (Enter key)
UAL<cr> <cr> stands for Carriage return (Enter key)
UAO<cr> <cr> stands for Carriage return (Enter key)

occupy 5 blocks, in which only one character each is seized. The output leads to the same result in both cases, but considerably more memory is used in the second version.

A new block is generally always started with a definition of a measured value. Definition of a measured value is always framed with the character '@'. A new block is also occupied after the definition of a measured value. If this is taken into consideration on inputting, the same effective memory occupancy can be achieved using the command UA as with the command UT.

The method using the least amount of memory is to input the complete telegram using the command UT.

7.4.5.3 Deletion of definitions

The deletion of definitions always relates to the last blocks in the definitions list,
see **7.4.5.2 Attachment of definitions**.
The command UR00002 can be used to delete the last two definition blocks, for example. It should be noted that a definition, input using UA or UT, can be divided up internally into several blocks. It is therefore recommended proceeding step by step when deleting definitions and checking the effect in telegram 6.

7.4.5.4 Storage of definitions

After the user-defined telegram has been input, it can be stored using the command 00US00002. Storage is necessary to ensure that the ULTRASONIC loads the defined telegram on the next restart.

7.4.5.5 Available measured values and data formats

The measured values (shown by a number) and the output format of the measured value are defined in the user-specific telegram within the formatting characters '@' Here every measured value is an object of a data type. Data types are for example TEXT, NUMBER or WHOLE_NUMBER. The wind velocity is for example the data type NUMBER: see **Table 6: Measured values and data types for user-specific telegram**.

Example:

The wind velocity is to be output in the user-specific telegram. From the table given below it can be seen that the wind velocity has the index 5. The formatting string thus starts with
00UT@5

It can also be seen from the table that the WV is the data type NUMBER. If the wind velocity is to be output without a sign using a total of 6 characters (including comma) and 2 places after the comma, the complete formatting string is as follows:

00UT@5,6,2@

If a line feed is to also be added to the end of the output, the ASCII character 13 (0Dh) must be attached.

00UT@5,6,2@\0d<cr> <cr> stands for Carriage return (Enter key)

Meas. value number	Description	Data type
0	Reserved	
1	Path measured value north -> south (counted value) With averaging this is the mean value of all measured values	WHOLE_NUMBER
2	Path measured value south -> north (counted value) With averaging this is the mean value of all measured values	WHOLE_NUMBER
3	Time stamp of last measured record (value in ms, relative to system start-up)	WHOLE_NUMBER
4	Wind velocity in Y-direction (Positive means wind in northern direction)	NUMBER
5	Wind velocity	NUMBER
6	Wind direction	NUMBER
7	Virtual temperature [°C]	NUMBER
8	Measuring value counter	WHOLE_NUMBER

	Specifies the number of data records which have been measured since system start-up.	
9	Standard deviation of the wind velocity in Y-direction	NUMBER
10	Standard deviation of the wind velocity	NUMBER
11	Reserved	NUMBER
12	Standard deviation of the virtual temperature	NUMBER
13	Reserved	
14	Status information (4 BYTE)	WHOLE_NUMBER
15	THIES status (2 Byte)	WHOLE_NUMBER
16	Reserved	
17	Storage interval (specifies the time interval in which the data are written into the averaging memory)	WHOLE_NUMBER
18	Number of data in the mean value buffer	WHOLE_NUMBER
19	Read-in analogue measuring value from pin WG/RXD-	NUMBER
20	Read-in analogue measuring value from pin WR/RXD+	NUMBER
21	Read-in analogue measuring value from pin ADIO	NUMBER
22	Read-in analogue measuring value of the reference voltage (980..1010)	NUMBER
23	Reserved	
24	Exclusive- Or check-sum of the data flow (Type 1)	CHECK_SUM
25	ULTRASONIC ID	WHOLE_NUMBER
26	Status for telegram 9	WHOLE_NUMBER
27	Wind velocity of the gust (see command GU)	NUMBER
28	Wind direction of the gust (see command GU)	NUMBER
29	Measured internal supply voltage	NUMBER
30	Internal temperature of housing	NUMBER

Table 6: Measured values and data types for user-specific telegram

7.4.5.6 Data formats

As already described under Available measured values and data formats, every data value is derived from a specific type. To indicate this the types each have their own formatting definition. The formatting string is specified after the measured value number on inputting, with the formatting string and measured value number being separated here by a comma.

Example:
The command

00UTHello World @7,8,2,1@\0d<cr> <cr> stands for Carriage return (Enter key)

defines output of the text 'Hello World', followed by the virtual temperature (formatted: 8 characters in total, 2 characters after the comma, with sign) and one line feed.

7.4.5.6.1 Output of fixed texts

The ULTRASONIC is equipped with an internal data format TEXT that is the simplest and at the same time most universal data format. It is used to output fixed text within the telegram output. This data format requires no further formatting characters. For example, the command

00UTHello World\0d<cr>
defines the output telegram

Hello World

Within this data type all ASCII characters are available via the key character '\'. It must nevertheless be borne in mind that the ASCII code is specified with 2 characters in the hexadecimal format. The input

00UT\41

thus generates an A in the output. The key character \ was introduced in order to include a control character like STX, ETX, CR in a telegram. The input

00UA\0d

attaches a line feed to the telegram.

A constant text can be positioned anywhere in the telegram definition (it should of course not interrupt the formatting of another data type). For example, the following definition is conceivable:

00UTWV = @5,6,2@ WD = @9,3@\0d<cr> <cr> stands for Carriage return (Enter key)

The following output string is conceivable:

WV = 000.06 WD = 181

7.4.5.6.2 Data format WHOLE_NUMBER

A whole number is a number which is output without commas. However, it can include a sign or /and be in hexadecimal format.

Format:
@'Measured value','Number of characters','Format'@

where

Measured value: see **Table 6: Measured values and data types for user-specific telegram**

29	**Measured internal supply voltage**	**NUMBER**
30	**Internal temperature of housing**	**NUMBER**

Table 6: Measured values and data types for user-specific telegram

Number of characters: number of characters output including any sign
Format: format of number shown
0: without sign and decimal
1: with sign and decimal
2: without sign and hexadecimal
3: with sign and hexadecimal

The number of characters and the 'Format' do not have to be specified; in this case they are padded with the values '3' (Number of characters) and '0' (Format).

Example 1:
00ut@17@\0d<cr> <cr> stands for Carriage return (Enter key)

Outputs the storage interval with three places without a sign. (Only with averaging switched on is display not equal to zero)

Example 2:
00ut@17,3,2@h\0d<cr> <cr> stands for Carriage return (Enter key)

Outputs the storage interval with three places without a sign as a hexadecimal value. (Only with averaging switched on is display not equal to zero)

7.4.5.6.3 Data format NUMBER

A floating point number is known as a number. It is formatted as for the WHOLE_NUMBER with the addition that a decimal place can be included.

Format:
@'Measured value','Number of characters','Decimal places','Format'@

with

Measured value: see **Table 6: Measured values and data types for user-specific telegram**.

Number of characters:	number of characters output including decimal points? and any sign
Decimal places:	number of places after decimal points?

Format: format of number shown
- 0: without sign and decimal
- 1: with sign and decimal
- 2: without sign and hexadecimal
- 3: with sign and hexadecimal

The number of characters, decimal places and the 'Format' do not have to be specified; in this case they are padded with the values '3' (Number of characters) '0' (Decimal places) and '0' (Format).

Example 1:
00ut@6@\0d<cr> <cr> stands for Carriage return (Enter key)

Outputs the wind direction with three places before the decimal point?, no places after the decimal point? and in decimal format.

Example 2:
00UT@7,8,2,1@\0d<cr> <cr> stands for Carriage return (Enter key)

Outputs the virtual temperature with a total of 8 characters, 2 places after the decimal point? and plus sign.

7.4.5.6.4 Data format PRÜF_SUMME (proof total)

The data format PRÜF_SUMME supports calculation of a proof total on the basis of a byte wise exclusive OR link. The PROOF TOTAL has the following format:

@24,'First','Last', 'Number of characters','Format'@

where

36:	Measured value identifier for EXOR proof total
First:	Number of character at which generation of the proof total starts. This character is included in the calculation (counting method starts with 0)
Last:	Number of character at which generation of the proof total ends. This character is not included in the calculation
Number of characters:	Number of characters output including any sign
Format:	Format of number shown

- 0: without sign and decimal
- 1: with sign and decimal
- 2: without sign and hexadecimal
- 3: with sign and hexadecimal

Example 1:
With a constant text 'AABBCC' the proof total is to be generated using the characters BB. The output is hexadecimal with 2 characters:

00UTAABBCC XOR=@24,2,4,2,2@h\0d<cr> <cr> stands for Carriage return (Enter key)

The output is

AABBCC XOR=00h

The XOR link of two identical characters is always 0.

Example 2:
The proof total is to be generated using the character 'B' via a constant text 'AABBCC'. The output is hexadecimal with 2 characters:

00UTAABBCC XOR=@24,2,3,2,2@h\0d<cr> <cr> stands for Carriage return (Enter key)

The output is

AABBCC XOR=42h

The value for the proof total is 42 h. The ASCII value of 42 h is 'B', which is the character to be checked itself.

7.4.6 Status information

In the ULTRASONIC two different status bytes are available:

- Extended status information
- THIES status

The THIES status is derived from the extended status information. The structure of the status values is described below.

7.4.6.1 Extended status information

The extended status is structured bitwise. The individual bits in the status value have the following meanings:

Bit number	Function	Description	
Bit 0	General malfunction	Averaging time < 10 sec	An error is output when no new measured value can be determined during a period of 10 sec.
		Averaging time > = 10 sec	An error is output when, based on a one-second measuring rate, less than 50 % of values are contained. Example: With an averaging time of 10 seconds 5 measured values must be contained in the averaging buffer.
Bit 1	Heating criterion	Is one when the criterion for switch-on of the heating is satisfied.	
Bit 2	Heating on	Is one when heating is switched on.	
Bit 3	Reserved	Is always zero.	
Bit 4	Static malfunction	Is set when a static malfunction has occurred, e.g. lasting violation of VT, no measured values. (> 1min)	
Bit 5 .. bit 7	Reserved	Is always zero.	
Bit 8	Used averaging memory	Specifies the averaging memory occupied. Bit 1 to bit 3 indicate the filling level of the averaging buffer in binary format. 0: Buffer 0< x ≤ 1/16 1: Buffer 1/8 < x ≤ 1/8 filled 2: Buffer 1/8 < x ≤ 3/16 filled 3: Buffer 3/16 < x ≤ 1/4 filled 4: Buffer 1/4< x ≤ 5/16 filled 5: Buffer 5/16 < x ≤ 3/8 filled 6: Buffer 3/8 < x ≤ 7/16 filled 7: Buffer 7/16 < x ≤ 1/2 filled 8: Buffer 1/2 < x ≤ 9/16 filled 9: Buffer 9/16 < x ≤ 5/8 filled 10: Buffer 5/8 < x ≤ 11/16 filled 11: Buffer 11/16 < x ≤ 3/4 filled 12: Buffer 3/4 < x ≤ 13/16 filled 13: Buffer 13/16 < x ≤ 7/8 filled 14: Buffer 7/8 < x ≤ 15/16 filled 15: Buffer 15/16 < x ≤ 1 filled	
Bit 9			
Bit 10			
Bit 11			
Bit 12	Reserved		
Bit 13	Flag restart	Is reset to zero in the first output-telegram after restart.	
Bit 14..bit15	Reserved	Is always zero.	
Bit 16..bit31	Reserved	Is always zero.	

7.4.6.2 THIES status

The THIES status is structured bitwise. The individual bits in the status value have the following meanings:

Bit number	Function	Description	
Bit 0	General malfunction	Averaging time < 10 sec	An error is output when no new measured value can be determined during a period of 10 sec.
		Averaging time > = 10 sec	An error is output when, based on a one-second measuring rate, less than 50 % of values are contained in the averaging buffer. Example: With an averaging time of 10 seconds at least 5 measured values must be contained in the averaging buffer.
Bit 1 Bit 2 Bit 3	Used averaging memory	Specifies the averaging memory occupied. Bit 1 to bit 3 indicate the filling level of the averaging buffer in binary format. 0: Buffer 0< x ≤ 1/8 1: Buffer 1/8 < x ≤ 1/4 filled 2: Buffer 1/4 < x ≤ 3/8 filled 3: Buffer 3/8 < x ≤ ½ filled 4: Buffer ½ < x ≤ 5/8 filled 5: Buffer 5/8 < x ≤ 3/4 filled 6: Buffer 3/4 < x ≤ 7/8 filled 7: Buffer 7/8 < x ≤ 1 filled	
Bit 4	Reserved	Is always zero.	
Bit 5	Static malfunction	Is set when a static malfunction has occurred, e.g. lasting violation of VT, no measured values. (> 1 min)	
Bit 6	Heating criterion	Is one when the criterion for switch-on of the heating is satisfied.	
Bit 7	Heating on	Is one when heating is switched on.	

7.4.6.3 Status Information in the Bayern Hessen Format

For the Bayern Hessen command interpreter a separate operating status and error status are generated with the following construction:

Bayern Hessen Operating Status:

Bit-Number	Function	Description
Bit 0		Always zero
Bit 1 Bit 2 Bit 3	Used Averaging memory	Specifies the averaging memory occupied. Bit 1 to bit 3 indicate the filling level of the averaging buffer in binary format. 0: Buffer 0< x ≤ 1/8 1: Buffer 1/8 < x ≤ 1/4 filled 2: Buffer 1/4 < x ≤ 3/8 filled 3: Buffer 3/8 < x ≤ ½ filled 4: Buffer ½ < x ≤ 5/8 filled 5: Buffer 5/8 < x ≤ 3/4 filled 6: Buffer 3/4 < x ≤ 7/8 filled 7: Buffer 7/8 < x ≤ 1 filled
Bit 4	Reserved	Is always zero.
Bit 5	Heating criterion	Is one when the criterion for switch-on of the heating is satisfied.
Bit 6	H Heating on	Is one when heating is switched on.
Bit 7	Reserved	Is always zero.

Bayern Hessen Error status:

Bit-Number	Function	Description	
Bit 0	General malfunction	Averaging time < 10 sec	An error is output when no new measured value can be determined during a period of 10 sec.
		Averaging time > = 10 sec	An error is output when, based on a one-second measuring rate, less than 50 % of values are contained in the averaging buffer. Example: With an averaging time of 10 seconds at least 5 measured values must be contained in the averaging buffer.
Bit 1	Static malfunction	Is set when a static malfunction has occurred, e.g. lasting violation of VT, no measured values. (> 1 min)	
Bit 2..7	reserved	Always zero	

7.5 Behavior of Instrument under extreme Conditions of Measurement Value Acquisition

The ULTRASONIC is equipped with a highly effective internal fault detection and correction system. This allows it to detect incorrect measured values using the history and to correct them where possible. It cannot however be ruled out that the ULTRASONIC will get into a situation in which the acquisition of new data is impossible. In this case the error bits are set in the status values and a defined value possibly output at the analog outputs.

It is a basic rule that the measured values output are always valid and can be interpreted by the target system (unless a specific error telegram is output in the in the case of error). In the case of error might happen that the data become 'too old', i.e. they are not updated over a certain time and freeze. In this case the error bits are set in the status byte and the analog outputs are set to a defined value. If a special error telegram is defined with a serial telegram, this is output.

7.5.1 In the event of error

Error may occur under the following circumstances:

Averaging time < 10 sec (parameter AV)	An error is output when no new measured value can be determined during a period of 10 sec.
Averaging time >= 10 sec (parameter AV)	An error is output when, based on a one-second measuring rate, less than 50 % of values are contained in the averaging buffer. Example: With an averaging time of 10 seconds at least 5 measured values must be contained in the averaging buffer.

7.5.2 Behaviour of analog outputs

If the analog outputs are active, they are switched to the minimum or maximum value in the case of error. The parameter EI determines which of the two values is output: see **Command EI**.

7.5.3 Behaviour of telegram output

In the case of error the relevant error telegram is output. In parallel the error information is shown in the status byte: see Fixed telegram formats.

7.6 Heating control

To prevent the instrument from freezing, and to avoid consequential error measurements, the ULTRASONIC is equipped with built-in heating for the sensor arms. In standard mode the heating is controlled by the system status.
In addition, there is a PT1000 temperature sensor in the ULTRASONIC instrument base. The values of this sensor are used as plausible information for heating control. For further information see the **Command HT**. The control of the heating by the software can be configured in 6 modes. The individual control conditions for the heating are given under command HT.

For the switch-on criterion the following requirements must be met:

1. Continuous failure of the measuring value acquisition of at least 10s.
2. The supply voltage must be higher than the set threshold (see HC).

HT0:

Heating remains permanently switched off.

HT1:

Heating software-controlled by virtual-temperature. (Softstart)

Activate measuring arms:
Virtual-temperature < parameter HL [Kelvin], or faulty measuring value acquisition.

De-activate measuring arms:
After 10 seconds, and virtual-temperature > parameter HH [Kelvin], and activating criterion not satisfied.

Activating Ultrasonic transducer heating:
Virtual-temperature < parameter HL [Kelvin], or faulty measuring value acquisition.

De-activating Ultrasonic transducer heating:
When the virtual-temperature > parameter HL [Kelvin] a**nd** the switch-on criterion is no longer met, the ultrasonic transducer heating remains active for an hour, and then shuts down.

HT2:

Softstart by ramp function (125s), afterward the heating remains active permanently.

HT 3:

Heating software controlled (Softstart)

Switch on heating of transducer arms:
Virtual temperature < 2°C or PT1000 temperature < 5°C, or disturbed data acquisition and PT1000 temperature < 25 °C

Switch off heating of transducer arms:
Virtual-temperature > 7°C and PT1000 temperature > 8°C, and switch-on criterion not met.

Switch on transducer heating:
Virtual temperature < 2°C or PT1000 temperature < 5°C, or disturbed data acquisition and PT1000 temperature < 10°C

Switch off transducer heating:
When virtual-temperature > 2°C a**nd** PT1000 temperature > 5°C **and** the switch-on criterion is no longer met at PT1000 temperature <10°C, the ultrasonic transducer heating remains active for an hour, and then shuts down.

HT 4:

Heating software controlled (Softstart)

Switch on heating of transducer arms:
Virtual-temperature < 2°C or PT1000 temperature < 5°C, or switch-on criterion and PT1000 temperature < 25°C

Switch off heating of transducer arms:
Virtual-temperature > 7°C and PT1000 temperature > 8°C and switch-on criterion not met.

Switch on transducer heating:
Virtual temperature < -25°C or PT1000 temperature < -20°C, or switch-on criterion and PT1000 temperature < 5°C

Switch off transducer heating:
When virtual-temperature > -20°C **and** PT1000 temperature > -15°C **and** the switch-on criterion is no longer met at PT1000 temperature <5°C, the ultrasonic transducer heating remains active for an hour, and then shuts down.

HT 5 (for operation with housing heating):

Heating software controlled for operation with housing heating (Softstart)

Switch on heating of transducer arms:
Virtual-temperature < 2°C or PT1000 temperature < 5°C, or switch-on criterion and PT1000 temperature < 15°C

Switch off heating of transducer arms:
Virtual temperature > 7°C and PT1000 temperature > 15°C and switch-on criterion not met.

Switch on transducer heating:
Virtual-temperature < -25°C or PT1000 temperature < -20°C, or switch-on criterion and PT1000 temperature < 15°C

Switch off transducer heating:
When virtual-temperature > -20°C **and** PT1000 temperature > -5°C C **and** the switch-on criterion is no longer met at PT1000 temperature <15°C, the ultrasonic transducer heating remains active for an hour, and then shuts down.

HT 6:

The heating is immediately switched on permanently but not clocked (as HT 2, w/o softstart).

The heating is switched on only in case that the supply voltage is above the value, which is stated by parameter “HC”, in addition to the above-mentioned criterions. The parameter HC determines the threshold of the supply voltage when the heating is activated.

The supply voltage can be inquired by the „command PW“. Additionally it can be output in the user-specific telegram. If the available hardware does not support the control of the supply voltage, a message „Heating ctrl not supported“ is output on entering the command (ID) PW.

The measurement of the operating voltage is carried out after alignment via a low pass by means of an analogue-digital-converter. Due to the very high complexity it was dispensed with a real effective value measurement. Thus the measuring values are measured exactly by „Command PW with DC-supply, however, with AC-supply they are between effective- and peak value, that means they are measured too high.

For setting the automatic threshold between supply in heated standard operation and unheated back-up operation the following procedure is recommended:

1. On supply of instrument for standard operation the measuring value of parameter „PW“ should be read-out preferably with active heating (Consideration of voltage drop at supply and cable with active heating under full-load, see **Command HT**.

2. Reading-out of value on supply of instrument in back-up-operation with inactive heating.

3. Setting of automatic threshold on mean value between the measured values by “command HC”, see **Command HC**.

Model with Ultrasonic Transducer Heating (4.386x.3x.xxx)

For locations with a particular risk of icing a model is recommended with electric heated ultrasonic transducers. Thanks to this additional heating measurement operation is possible even under difficult conditions of icing.

7.7 Output of all system parameters

Most parameters of the ULTRASONIC are stored internally in an EEPROM. The command SS can be used to output all stored parameters.
Before amending parameters it is recommended making a backup copy of existing settings and storing them in a text file: see also **Command SS**.

7.8 Enquiry about software version

The command SV is used to enquire about the software version. For further information see **Command SV**.

7.9 Operating Hours Counter

The instrument provides an operating hours counter, which can be queried via the parameter OH (operating hour). The counter returns the operating hours in “hours”, see also **Command OH**.

The operating hours counter overflows after 11,4 years and restarts with 0.

7.10 Storing of System Events

The instrument has an internal circular buffer, that stores important system information. The parameter SM (system event mask) determines, which events are to be stored in the system event memory. The following events are available:

1. System start (valence 1)

2. Closing up in configuration mode (valence 2)

3. Description of internal registers PR and PT (valance 4)

4. No valid data over a longer period (valence 8)

5. Averaging buffer fill level < 2 increments (basis is the value from the extended status) (valence 16)

If, for ex., the events ‘system start’ and ‘description of internal registers PR and PT’ shall be stored, the value for SM is to be set to 5, see also **Command SM**.

The values are stored in the memory along with the operating hours counter. The output is effected in clear text.

By the query 00SE the system outputs the stored information. The output starts with the Text

‘System events:’

“SM00005” //output of the current parameter SM

and ends with the output

‘End’.

Between both output the status signals are output in chronological order.

Description of the Status Signal

To 1) System start

Signal is generated with every restart.

To 2) Closing up in configuration mode

If the system is set into the configuration mode, this is stored.

To 3) Description of internal registers PR and PT

I for 15 seconds no valid value has been measured the internal registers PR and PT are newly recorded.

To 4) No valid data over a longer period

If no valid measuring value has been acquired over a period, which is selectable by the parameter RF, the system make a restart. Before restart, the ULTRASONIC sends a respective signal to the buffer.

To 5) Averaging buffer fill level < 2 increments (basis is the value from the extended status)

If the fill level of the averaging buffer in the extended status is < 2 increments, a signal is sent. A new signal is sent in case the fill level is > 2 increments in the meantime. This signal might occur in case of extreme precipitation events.

7.11 Bayern Hessen mode

The standard version of the ULTRASONIC contains a command interpreter for Bayern Hessen telegrams. For further information refer to own documentation.
The command interpreter for the Bayern Hessen variant is switched on using the command 00CI00001: see also **Command CI**.

For coding the operating status and error status refer to **7.4.6.3 Status Information in the Bayern Hessen Format**.

In the Bayern Hessen command interpreter also all commands of the ULTRASONIC are available. They are embedded in the command <CTR B>ST0....<CTRL C>. Thus, for example, the user access is activated by the command <CTR B>ST000KY00001<CTRL C> and by <CTR B>ST000AM00001<CTRL C> the averaging time is changed.

Moreover, in the Bayern Hessen mode different combinations of measuring instrument addresses are available, see **Command BH**.

7.12 Forcing a restart

The command RS can be used to force a restart of the ULTRASONIC. The commands

00KY00001<cr>
00RS00001 <cr>

will restart the ULTRASONIC after approx. 3 sec: see also **Command RS**.

7.13 Energy-saving mode

The ULTRASONIC does not itself have an energy-saving mode. However, it can be configured so that it only has to be supplied with power for a limited period. The following parameters can be used for optimisation:

Switch on fast boot:

On startup using the parameter 00FB00001 and FB0002 prevents the ULTRASONIC from first starting the bootloader and waiting for a program update. See also **Command FB**.

A value of SM >0 delays the boot procedure for approx. 200 ms. See **Command SM**.

Signal when averaging buffer is full:

The connector pin ADIO can be switched so that the PIN is set to +%V when the averaging buffer of the ULTRASONIC has reached a content level > 7/8. Here the shortest adjustable averaging time is 600 ms: see also **Command AC**, **Command AV**.
The signal can be used to disconnect the ULTRASONIC from the voltage supply.

Switch off heating:

With the command 00HT00000 the heating of the ULTRASONIC is switched off completely: see **Command HT**.

7.14 Bootloader

Whenever the ULTRASONIC is restarted, the instrument first starts a bootloader. The function of the program is to start program upload. For this a specific program containing the new firmware must be started at a connected PC. After identification program upload then starts automatically. If the bootloader does not know its remote station, the ULTRASONIC firmware starts. The bootloader can be bypassed if the parameter “Fast Boot” FB is set to 00FB00001 or FB00002.

The instrument is internally equipped with two different bootloaders:

- THIES-specific bootloader (bus-compatible)
- X-modem CRC bootloader (256 byte per frame)

The bootloaders are selected through the commands FB00000 (THIES-bootloader) respectively FB00003 (X-modem bootloader).

The bootloader is started after each system start.

00FB00001 or FB00002

is set.

7.14.1 X-Modem Boot loader

For the uploading of new firmware via the serial interface the protocol XMODEM CRC is used with a reference length of 128 byte per package Necessary are a PC and a terminal program with a respective possibility of setting. Tested and released is the boot loader with Windows-hyper terminal and ZOC (V4.11).

Operation:

The boot loader starts always with 96000 baud, 8 data bits, no parity, and a stop bit (9600,8,N,1) On starting the instrument the following data are output: version, used ID, and the set duplex mode of the ULTRASONIC. For re-starting the instrument without cutting-off the supply please use the reset-command „<id>RS00001“.

XModem Loader CRC

Version 3.04

Insert 00UP00001 to start bootloader

In order to continue to parameterize the boot loader, please enter the command <id>UP00001 together with the ID, here: 00UP00001. Alternatively, the command<id>UP00002 can be transmitted directly in order to start the transfer immediately. For entering the command the user has approx. 10 minutes. If no valid command or <id>UP00000 is entered within this time period the ULTRASONIC firmware starts. When entering <id>UP00001 the ULTRASONIC turns into the boot loader mode where further details can be stated. The following output appears:

use <id>BR000XX to set baudrate
use <id>ID000XX to set ID
use <id>DM0000X to set duplex mode
use <id>UP00000 to cancel upload
use <id>UP00002 to start upload

- The command codes have to be entered always in capital letters (in „normal“ operation also lower case letters are accepted).
- The baud rate can be changed through BR. All baud rates, containing 8 data bits, are valid. For further parameter see chapter **Command BR**.
- The instrument address can be set by ID. Valid valued are here within the range 0 <= ID <= 99.
- The duplex mode is changed by DM. <id>DM00001 is full duplex, <id>DM00000 is halve duplex.
- The program transfer is started by the command <id>UP00002.
- By <id>UP00000 the transfer program is terminated and the ultrasonic-firmware is started.

Remark: All parameters which are changed here, are valid only for the time period of the boot loader. They do not change the values in the global parameter memory.

After entering of the command <id>UP00002 the ULTRASONIC starts the data transfer, by sending cyclically the sigh “C”. The user has now approx. 30 sec. for starting the transfer program of the terminal. When the transfer program is started the data transfer initiates with secured CRC-check sum. Erroneous and disappeared data packages are resent automatically, so that the received data are error-free.

Only when the binary data are completely available on the ULTRASONIC, the new program is written into the program memory. After successful transmission the new program starts automatically.

If the transmission is stopped, the ULTRASONIC starts automatically the firmware available after a respective timeout (20 s).

7.15 Fast boot

See Energy-saving mode.

7.16 Plausibility

To identify incorrectly measured values the ULTRASONIC offers an internal plausibility check, which assesses measured values using the history. Incorrect measured values can be caused for example by heavy rainfall or foreign bodies in the measurement path.
If an incorrect measured value is identified, the ULTRASONIC sets its acquisition of measured values to the maximum speed. In this mode it is more likely to obtain a valid measured value in fault conditions (e.g. rain). A complete data record is now made every 4ms using all 4 sensors so that the ULTRASONIC generates 250 measured values per second
For plausibility check selection see also **Command MD**, **Command PC**.

7.17 Online help

For a short description of commands the ULTRASONIC contains an Online help which provides information about individual commands. The Help text for the command is returned by inputting the command and a '?'.
If the command

00?? ?<cr> <cr> stands for Carriage return (Enter key)

is input, the ULTRASONIC will list all commands with the relevant help.

Example:
Help with setting the baud rate is to be called up: see **Command BR**.
With the command

00BR?<cr> <cr> stands for Carriage return (Enter key)

the ULTRASONIC provides the following response:
BR: Set / get baud rate

0 -> reserved	10 -> 1200 7E1
1 -> reserved	11 -> 1200 7E1
2 -> 1200 8N1	12 -> 4800 7E1
3 -> 2400 8N1	13 -> 9600 7E1
4 -> 4800 8N1	14 -> 19200 7E1
5 -> 9600 8N1*	15 -> 38400 7E1
6 -> 19200 8N1	16 -> 57600 7E1
7 -> 38400 8N1	17 ->115200 7E1
8 -> 57600 8N1	
9 ->115200 8N1	

8 Configuration of ultrasonic anemometer by customer

The Ultrasonic Anemometer is factory-set prior to delivery to the customer.
Setting is described in the supplementary sheet *"Factory Setting"*.

It is possible for the customer to alter the factory setting of the Ultrasonic Anemometer or to adapt it to new requirements. Here it should be borne in mind that with a change in settings, the order number allocated at the factory can then no longer help with identification.

The Anemometer 2D can be configured via its serial data interface using commands.
see section:

- *Access mode*
- *Command list*

Any standard terminal program such as "Procomm", "Telix" or a Windows terminal program (e.g. Hyper Terminal) can be used for this purpose.

Recommendation:
After performing configuration please amend the supplementary sheet "Factory Setting" and also send in to the manufacturer in the event of maintenance or repair.

8.1 Storing of Parameter Data Set

The ULTRASONIC is able to store internally three complete parameter data sets. By the commands SP and RP complete parameter sets are stored respectively read-out from the memory and applied. Parameter sets are stored, for ex. In case that tests with different instruments settings (for ex. different user-defined telegrams) shall be carried out. When a configuration with user-defined telegram has been made, this can be stored and another configuration can be effected. This can be stored, too. By downloading the respective configuration the user can now select from the stored configurations.

By the command 00SP0001 for ex. all parameters are stored into the buffer ‘1’. By command 00RP00001 all parameters are read and applied by the system. After back-reading the data from the buffer by command RP a system start is carried out automatically, see also **Command RP**, **Command SP**.

The buffer with the index ‘0’ contains all values of the delivery, and cannot be overwritten.

8.2 Establishing of Delivery Condition

The parameter data set on delivery is stored in the parameter data set ‘0’. By calling 00RP00000 the instrument is set into the condition of delivery. After reading a system start is carried out automatically.

8.3 Administration of User Information

The instrument provides a data buffer of 32 texts with 32 signs each, where any text can be stored. By the command UD this buffer is administered. The format of entry is

00Udn,xxxx

with

n: index 1..32

xxxx: text with a maximum length of 32 signs

Storing of user information:

The command

00UD1, THIES ULTRASONIC

stores the text ‘THIES ULTRASONIC’ at data position one. The query

00UD1

provides the result

01: THIES ULTRASONIC.

During the query the data set number is always included in the output in order to allow a selective changing.

The query

00UD

returns all user-specific texts, for ex.

01: THIES ULTRASONIC

03: mounted at Göttingen

Deletion of Definitions

Data sets must be deleted individually. For this, the data set number followed by a comma, is necessary. The input of

00UD3,

deletes the text at position 3.

9 List of Commands

	Command	Description
Command AA	T <id>AA<para5>	Functions for PIN WG/RXD - (analogue channel A)
Command AB	T <id>AB<para5>	Functions for PIN WR/RXD + (analogue channel B)
Command AC	T <id>AC<para5>	Functions for the PIN ADIO (analogue channel C)
Command AN	T <id>AN<para5>	Analogue output mode (analogue output)
Command AO	T <id>AO<para5>	Scaling of the analogue wind direction output (angle output)
Command AR	<id>AR<para5>	Scaling of the analogue wind speed output (analogue range)
Command AS	<id>AS<para5>	Set the analogue outputs to a fixed value
Command AT	<id>AT<para5>	Checks the analogue in-/outputs
Command AV	<id>AV<para5>	Communication period (averaging time)
Command AU	<id>AU<para5>	Update of the analogue inputs (analogue update rate)
Command AY	<id>AY<para5>	Scaling of the minimum value for analogue input PIN WG/RXD-
Command AZ	<id>AZ<para5>	Scaling of the maximum value for analogue input PIN WG/RXD-
Command BH	<id>BH<para5>	Select measuring instrument address of Bavaria Hesse
Command BL	<id>BL<para5>	Returns the version of the boot loader (boot loader version)
Command BP	<id>BP<para5>	Time for pretrigger in burst mode (burst pretrigger)
Command BS	<id>BS<para5>	Buffer range in burst mode (burst store)
Command BR	<id>BR<para5>	Selecting the baud rate (baud rate)
Command BT	<id>BT<para5>	Bus terminating resistor
Command BX	<id>BX<para5>	Selecting the baud rate (baud rate extension)
Command BY	<id>BY<para5>	Scaling of the minimum value for analogue input PIN WG/RXD+
Command BZ	<id>BZ<para5>	Scaling of the maximum value for analogue input PIN WG/RXD+
Command CA	<id>CA<para5>	Adjustment value for analog outputs in 0.1 per mil (inclination)
Command CB	<id>CB<para5>	Adjustment value for analog outputs (offset correction)
Command CI	<id>CI<para5>	Select the command interpreter (command Interpreter)
Command CY	<id>CY<para5>	Scaling of the minimum value for analogue input PIN ADIO
Command CZ	<id>CZ<para5>	Scaling des maximum value for analogue input PIN ADIO
Command DA	<id>DA<para5>	Data request of the command interpreter of Bavaria Hesse
Command DE	<id>DE<para5>	Standard deviation
Command DF	<id>DF<para5>	Set initial values (default values)
Command DM	<id>DM<para5>	Duplex mode of the serial interface (Duplex mode)
Command DV	<id>DV<para5>	Instrument version, date- time information of firmware
Command DY	<id>DY<para5>	Effective acoustic measurement path length of the Y-path (nominally 20000)
Command EI	<id>EI<para5>	Analogue value max. /min. in case of error (error inversion)
Command FB	<id>FB<para5>	Instrument re-start with/ w/o option for firmware update (Fast Boot)
Command GU	<id>GU<para5>	Maximum value of WV and resp. WD in the averaging time, gust
Command HC	<id>HC<para5>	Threshold of the supply voltage for switch-on suppression of heating (heating control)
Command HL	<id>HL<para5>	Lower threshold temperature for turning heating into Kelvin
Command HH	<id>HH<para5>	Upper threshold temperature for turning heating into Kelvin
Command HT	<id>HT<para5>	Heating control
Command ID	<id>ID<para5>	Instrument ID
Command IT	<id>IT<para5>	Gehäuseinnentemperatur
Command KY	<id>KY<para5>	Access mode (key)
Command MA	<id>MA>>para5>	Automatic adjustment of the measuring value acquisition (measurement automation)
Command MD	<id>MD>>para5>	Interval of the meas. value acquisition of the measurement delay

Command OH	<id>OH<para5>	Query of the operatingl hours counter (operational hours)
Command OR	<id>OR<para5>	Telegram output interval (output ratio)
Command OS	<id>OS<para5>	Scaling of wind speed output (output scale)
Command PC	<id>PC<para5>	Plausibility check
Command PR	<id>PR<para5>	Period receive time
Command PT	<id>PT<para5>	Period Transmit Time
Command PW	<id>PW<para5>	Output of measured supply voltage (power)
Command RC	<id>RC<para5>	Slew rate calibration of the A/D converter
Command RD	<id>RD<para5>	Response delay on telegram query (Response delay)
Command RF	<id>RF<para5>	Restart in case of invalid measuring values (restart at fail)
Command RP	<id>RP<para5>	Read Parameter data set (read parameters
Command RS	<id>RS<para5>	Re-start ULTRASONIC (reset)
Command SC	<id>SC<para5>	Starting value of the characteristic of the analogue outputs, 4..20 mA (start current)
Command SE	<id>SE<para5>	Output of the stored system information (system events)
Command SH	<id>SH<para5>	Serial number high word
Command SL	<id>SL<para5>	Serial number low word
Command SM	<id>SM<para5>	System event mask
Command SP	<id>SP<para5>	Store parameter data set (Store Parameters)
Command SS	<id>SS<para5>	System status
Command SV	<id>SV<para5>	Software version
Command TB	<id>TB<para5>	Specifies data telegram outputting data after burst measurement
Command TF	<id>TF<para5>	Transformer for generating acoustic signals
Command TN	<id>TN<para5>	Sensor delay NORTH sensor
Command TR	<id>TR<para5>	Telegram request (transmit request)
Command TT	<id>TT<para5>	Autonomous telegram output (transmit telegram)
Command TS	<id>TS<para5>	Sensor delay SOUTH sensor
Command UA	<id>UA<para5>	Definition of user-specific telegram (User Added telegram)
Command UD	<id>UD<para5>	User-defined character (User data)
Command UR	<id>UR<para5>	Remove in the user-defined telegram (remove user telegram)
Command US	<id>US<para5>	Save user-specific telegram definition (user telegram save)
Command UT	<id>UT<para5>	Telegram acc. to user's specification (user telegram)
Command VC	<id>VC<para5>	Constant velocity correction (velocity correction)
Command XI	<id>XI<para5>	External ID

10 Command and description

Command AA

T <id>AA<para5> Functions for PIN 1
Access: User mode
Description: Sets the mode for PIN 1. Values for this parameter can only be changed when the ULTRASONIC runs in half duplex mode (see **Command DM**). For the signal line PIN1 the following functions can be specified:

Parameter description:

0: Analog input signal is not used. Full duplex mode is possible (see **Command DM**).

1: PIN 1 is used as analog input. The analog voltage value at PIN 1 is read in cyclically by the system and digital conversion performed. The analog output value for WV is switched off (see **Command AN**).
With a maximum input voltage of 10.0 V the digital value output is 65536 (16bit) with a resolution of 152 ppm.
The prerequisite for this mode is half duplex mode (see **Command DM**).

2: Self test of analog wind velocity output.
In this state the analog output signal of the wind velocity is read back via the analog input signal. The prerequisite is that the analog wind velocity output is switched as a voltage output. (see **Command AN**)
PIN 1 must not be connected externally. The analog values are output by the ULTRASONIC, and are re-imported. The analog voltage value at WV/RXD- undergoes digital conversion cyclically and is read in by the system.
The digital value read-in can be output via the user-defined telegram (*see* **User-specific telegram***).*
The prerequisite for this mode is half duplex mode (see **Command DM**).

3: Analog output of wind velocity in azimuth. Is output when AN != 2, see **Command AN**.

4: Input used as SONIC ID (Bit 0). If the mode is selected in which the ULTRASONIC is to receive its ID via the external lines, this PIN must be configured as follows: 00AA00004. (see also **Command XI**).

When using AA, AB and partly AC the parameter AN must not be switched to two!!!
See also **Command AN**.

Range of values: 0…4
Initial value: 0

Command AB

T <id>AB<para5> Functions for PIN 4
Access: User mode
Description: Sets the mode for PIN 4. The values for this parameter can only be changed when the ULTRASONIC runs in half duplex mode (see **Command DM**). For the signal line PIN4 the following functions can be specified:

Parameter description:

0: Signal is not used. Full duplex mode is possible (see **Command DM**).

1: PIN 4 is used as analog input. The analog voltage value at PIN 4 is read in cyclically by the system and digital conversion performed. The analog output value for WD is switched off (see **Command AN**). The prerequisite for this mode is half duplex mode (see **Command DM**). With a maximum input voltage of 10.0 V the digital value output is 65536 (16bit) with a resolution of 152ppm.

2: Self test of analog wind direction output
In this state the analog output signal of the wind direction is read back via the analog input signal. The prerequisite is that the analog wind direction output is switched as a voltage output (see **Command AN**).
PIN 4 must not be connected externally. The analog values are output by the ULTRASONIC, and are re-imported
The digital value read-in can be output via the user-defined telegram (see **User-specific telegram**).
The prerequisite for this mode is half duplex mode (see **Command DM**).

3: Analog output of wind direction in azimuth. Is output when AN != 2, see **Command AN**.

4: Input used as SONIC ID (Bit 1). If the mode is selected in which the ULTRASONIC is to receive its ID via the external lines, this PIN must be configured as follows: 00AB00004. (see also **Command XI**).

When using AA, AB and AC the parameter AN must not be switched to two!!! See also Command AN.

Range of values: 0...4
Initial value: 0

Command AC

T <id>AC<para5>	Functions for PIN 3 (ADIO)
Access:	User mode
Description:	Sets the mode for PIN 3 (ADIO). It can either be switched as an analog input, digital input or digital output. The functions of the PIN 3 (ADIO) are independent of the duplex mode selected.

Parameter description:

0:	Signal is not used.
1:	PIN is used as analog input. The analog voltage value is read in cyclically by the system. Input resistance 200 kΩ. With a maximum input voltage of 10.0V the digital value output is 65535 with a resolution of 16 bit or approx.15 ppm.
2:	Reserved
3:	Analogue output of acoustic virtual temperature. Is output when AN != 2, see **Command AN**. The analogue output is firmly scaled in the range from – 40°C to + 80°C.
4:	Input used as SONIC ID (Bit 2). If the mode is selected in which the ULTRASONIC is to receive its ID via the external lines, this PIN must be configured as follows: 00AC00004. (see also **Command XI**). Input resistance 200 kΩ.
5:	PIN is switched as digital output. The output is set to +5V when the averaging buffer is filled to over 80 % for the first time after startup. This function can be used when the ULTRASONIC is to be operated so that it is to be disconnected from the voltage supply after complete measurement, see also **7.13**.
6:	PIN 3 (ADIO) is switched as digital output. The output is set to 0 V.
7:	PIN 3 (ADIO) is switched as digital output. The output is set to + 5 V.
8:	The PIN 3 (ADIO) is used for heating control. A level of <2V switches the heating off, and a level of > 2V activates parameterised heating control, see **7.6**. Input resistance 200kΩ.
9:	The PIN 3 (ADIO) is used for heating control. A level of >2V switches the heating off, and a level of < 2V activates parameterised heating control, see **7.6**. Input resistance 200kΩ.
10:	As for 8) with additional 10 k pull-up resistor at PIN 3 (ADIO).
11:	As for 9) with additional 10 k pull-down resistor at PIN 3 (ADIO).
12:	As for 8) with additional 10 k pull-down resistor at PIN 3 (ADIO).
13:	As for 9) with additional 10 k pull-up resistor at PIN 3 (ADIO).
14:	Triggers a single measurement on rising edge, when PIN 3 (ADIO) is set to + 5 V. This mode can be used for synchronous measurement acquisition. Required pulse length > 1µsec. Input resistance 10kΩ pull down.
15:	Starts the continuous measurement on rising edge, when PIN 3 (ADIO) is set to + 5 V. Required pulse length. > 1µsec. The current measurement can be stopped again by command input AC15. Input resistance10 kΩ pull down.
16:	Starts measurement in burst mode when PIN 3 (ADIO) is set to 5 V. Required pulse length > 1µsec. If PIN 3 (ADIO) is open, no measurement is started. (Internal pull-down resistor switched on) If PIN 3 (ADIO) is fixed to + 5 V, burst mode is started automatically when previous measurement ends. Input resistance 10 kΩ pull down.
17:	Starts measurement in burst mode when PIN 3 (ADIO) is switched to AGND. If PIN 3 (ADIO) is open, no measurement is started. (Internal pull-up resistor switched on) If PIN 3 (ADIO) is fixed to AGND, burst mode is started automatically when previous measurement ends. Input resistance 10 kΩ pull up.
18:	For wind directions <170° ADIO-pin outputs 5 V, for wind directions >= 170° 0V.
19:	PIN 3 (ADIO) output the internal status of heating. A level of 0V means: heating off, level of 5 V means: heating on.

20: PIN 3 (ADIO) output the internal status of heating. A level of 0V means: heating off, level of 5 V means: heating on.
Parameter is used when instrument is equipped with housing heater. The "high"-level at ADIO de-activated the housing heater.

Range of values: 0... 20
Initial value: 0

Command AN

T <id>AN<para5> Analog output mode (Analog output)
Access User mode
Description: Sets the mode for output of the analog wind direction (WD) and wind velocity (WV). This command can be used to switch between the current output and voltage output. Any change in the value always relates to both outputs (WD and WV) simultaneously. The output value range can be selected with the **Command SC**. It is either 0..20 mA (0..10 V) or 4..20 mA (2..10 V): see **Command SC**.
The command can only be changed when the mode half duplex is selected: see **Command DM**.

Parameter description:

0: Voltage output
1: Current output
2: Analog outputs are not used. Internal calculation and output of the analog values is switched off completely when AN=2 is set and with AA=AB=AC=0.

Range of values 0... 2
Initial value: 0

Command AO

T <id>AO<para5> Scaling of analog wind direction output (Angle Output)
Access: User mode
Description: With analog output of the wind direction scaling can be selected in which the angle is output. To preserve compatibility with existing systems it is sometimes necessary to select an extended angle range.
See also **Command AN**, **Command DM**, **Command SC**.

Parameter description:

0: Output of angle in range 0...360° (0° = north)
1: reserved
2: reserved
3: Output of WD und WV
At 0m/s wind velocity exactly halve of the analogue value is output (5V;10mA resp. 6 V; 12 mA).

Apply for a current output 0..20 mA:
0..10 mA = 20..0 m/s (from northern direction)
10..20 mA = 0..20 m/s (from southern direction)

Apply for a current output 4..20 mA:
4..12 mA = 20..0 m/s (from northern direction)
12..20 mA = 0..20 m/s (from southern direction)

Apply for a voltage output 0..10 V:
0..5 V = 20..0 m/s (from northern direction)
5..10 V = 0..20 m/s (from southern direction)

Apply for a voltage output 2..10 V:
2..6 V = 20..0 m/s (from northern direction)
6..10 V = 0..20 m/s (from southern direction)

Value range: 00... 3
Initial value: 3

Command AR

<id>AR<para5> Scaling of analog wind velocity output (Analog Range)
Access: User mode
Description: Specifies the range used for scaling of the analog wind velocity output. The standard ULTRASONIC scales the wind velocity as follows:
0..10 V (2..10 V) corresponds to 0..60 m/s
It may however also be sensible to scale the wind velocity of 0..30 m/s:
0..10 V (2..10 V) corresponds to 0..30 m/s
The end of the measuring range is specified with this parameter. Specification is made in m/s.

Parameter description:

0..100: Specifies of the end of the measuring range of the wind velocity (WV).

If the command AR00045 is input for example, 10V or 20mA corresponds to a wind velocity of 45 m/s.

Range of values 1…100
Initial value: 20

Command AS

<id>AS<para5> Sets the analogue outputs to a fixed value
Access: User mode
Description: Sets the analogue outputs to a fixed value. The value is stated in increments for the internal AD transformer. Value ‘0’ for AS deactivates the function. Function is used for instrument adjustment.

Value range: 0...65535
Initial value: 0

Command AT

<id>AT<para5> Checks the analogue in-/outputs.
Access: User mode
Description: Connects different voltages to the outputs and read them in again. Operates only in half-duplex mode. The analogue in-/outputs must not be connected.

Value range: 0...65535
Initial value: 0

Command AU

<id>AU<para5> Update rate of analogue inputs/outputs (Analogue Update)
Access: User mode
Description: This command is used to specify the time interval in which the selected analogue inputs are sampled and the outputs are written. The parameter defines the interval between two complete update intervals in ms.
A conversion time of approx. 2.5 ms is required per channel.
In the configuration each of the three PINs PIN 1, PIN 4 and PIN 3 (ADIO) can be defined individually as an analog output. The time for an update-interval is the sum of the A/D-conversions of the individual measurement channels, i.e. with 3 channels thus 7,5 msec.
When using analog data output (see **Command AN**) the channels PIN 1, PIN 4 are used simultaneously and require a conversion time of approx. 5 ms.

Example:
PIN 3 (ADIO) is switched as an analog input.
The sampling interval is 50 ms (with AU00050).The ULTRASONIC finishes conversion after approx. 3 ms if no other analog channel is switched on.
If the sampling interval is set shorter than the update-interval takes, the actual duration of the update-interval dominates, and the value set for the sampling interval has no effect.
If the parameter AU is set to 0, the analogue inputs/outputs are not sampled resp. updated.

Range of values: 1…256
Initial value: 50

Command AV

<id>AV<para5> Averaging period (Average)
Access: User mode
Description: This command can be used to specify the period over which the ULTRASONIC averages its measured values. Given the high measuring speed of up to 2ms for the generation of a measured value, the use of averaging is sensible in most cases.
Parameter description:

Parameter for AV	Selected averaging time
0	No averaging
1	Averaging over 1 s
2	Averaging over 10 s
3	Averaging over 60 s
4	Averaging over 120 s
5	Averaging over 10 min
6..60000	Averaging over n* 100 ms, e.g. 00AV00025 means averaging over 2.5 s

Table 7: Adjustment of averaging periods with parameter AV

The averaging memory is designed as a sliding memory. With every measurement the measured value is provided with a time stamp. The mean value buffer is only so large as data over the averaging period is contained in the memory.
On startup the data of the averaging memory are instantly valid. Averaging is performed immediately using the measured values available as the quality of the measured values is not achieved until a certain content level of the mean value buffer.
If an averaging period of AV00000 is selected, the averaging period is calculated from the selected output interval OR (see Command OR). The averaging period is calculated as follows:

T [ms] = OR
Range of values 0...60000
Initial value: 10

Command AY

<id>AY<para5> Scales the output value of the minimum value for the analogue input PIN WG/RXD- (analogue channel A)

Access: User mode

Description: The measuring values of the analogue inputs can be output in scaled form. By means of the command AY the output value is stated for 0V input voltage. The value for the parameter AY is calculated as follows:

Parameter value = 30000 + (reference value*10)

See also **Analog inputs** and **Command AZ**.

Command AZ

<id>AZ<para5> Scales the output value of the minimum value of the analogue input PIN WG/RXD- (analogue channel A)

Access: User mode

Description: The measuring values of the analogue inputs can be output in scaled form. By means of the command AZ the output value is stated for 9,96 V input voltage. The value for the parameter AZ is calculated as follows:

Parameter value = 30000 + (reference value*10)

See also **Analog inputs** and **Command AY**.

Command BH

<id>BH<para5> Selects the Bayern Hessen measuring instrument addresses (Bayern-Hessen instrument address)

Access: User mode

Description: The ULTRASONIC contains several command interpreters. The THIES command interpreter is active in standard mode. **Command CI** can be used to change the command interpreter. If the Bayer-Hessen interpreter is selected, the measured values for wind direction, wind velocity and virtual temperature are interrogated under different measuring instrument addresses. The command BH specifies which measuring instrument addresses are active. The following combinations are available for selection:

Parameter description:

Parameter value	**Measuring instrument address**		
	WV	**WD**	**VT**
0	011	001	022
1	400	410	420
2	202	201	211
3	011	001	021
4	081	082	083
5	001	002	003

Table 8: Measuring instrument addresses in Bayern Hessen command interpreter

See also **Command CI**, Bayern Hessen mode.

Command BL

<id>BL<para5> Returns the software version of the bootloader
Access: Query mode
Description: On query of the parameter the software version of the bootloader is returned..
For interpretation the output version must be divided by 100. An output value 00BL00300 represents the version V3.00.
Number ‚3' means the main version, 00 is the build–label.

Command BP

<id>BP<para5> Determine the pretrigger in the burst mode.
Access User mode
Description: States the time (ms) of the data recording in the burst mode before the real trigger event.

Value range: 0...65535
Initial value: 100 ms

Command BR

<id>BR<para5> Select baud rate (Baud Rate)
Access: User mode
Description: The ULTRASONIC communication can be used with different baud rates. The adjustment range is from 1200 baud to 921 Kbaud. The baud rate can be selected with the commands BR and BX. With the command BR the baud rate is specified in the range from 1200 baud to 115200 baud. The command BX specifies the baud rate from 230400 baud to 921600 baud. The following baud rates are defined for BR:

Parameter description:

	1200	2400	4800	9600	19200	38400	57600	115.2K
8N1	2	3	4	5 *	6	7	8	9
7E1	10	11	12	13	14	15	16	17
7O1	18	19	20	21	22	23	24	25
8N2	26	27	28	29	30	31	32	33
7E2	34	35	36	37	38	39	40	41
7O2	42	43	44	45	46	47	48	49

Table 9: List of baud rates with telegram BR

When interrogating the baud rate using the command BR, the ULTRASONIC gives back the last programmed baud rate selected either using the command BR or BX.

Range of values 2..49
Initial value: 5

Command BS

<id>BS<para5> Sets buffer size in burst mode
Access: User mode
Description: When burst mode is activated, this parameter can be used to select the buffer size. The maximum buffer size is 40,000 complete measuring cycles. Burst mode is activated with command 00AC00016 or 00AC00017, see **Command AC**.

Range of values: 1..40000
Initial value: 1000

Command BT

<id>BT<para5> Set bus terminating resistor
Access: User mode
Description: Connects a 100R resistance between the lines TXD+ und TXD- in case BT00001 is set. With BT00000 the resistance is switched off.

Value range: 0...1
Initial value: 0

Command BX

<id>BX<para5> Select baud rate (Baud Rate extension)
Access: User mode
Description: The ULTRASONIC communication can be operated with different baud rates. The adjustment range is from 1200 baud to 921 Kbaud. The baud rate can be selected with the commands BR and BX. With the command BR the baud rate is specified in the range from 1200 baud to 115200 baud. The command BX specifies the baud rate from 230400 baud to 921600 baud. The following baud rates are defined for BX:

Parameter description:

101:	230400 baud	8,N,1
102:	460800 baud	8,N,1
103	921600 baud	8,N,1

Table 10: List of baud rates with telegram BX

Programming of the extended baud rate includes a safety mechanism which does not allow a baud rate to be selected with the command BX when communication cannot be established at this baud rate. With most PCs the maximum baud rate of the integrated RS485 is set at 115200 baud. It is not possible to select a higher baud rate. If the ULTRASONIC has a baud rate >115200 Kbaud, communication with the instrument might not be possible. To work with such baud rates a standard PC requires a special extension card.
To set the ULTRASONIC to an extended baud rate the procedure given below must be followed:

Output situation:
Communication with the ULTRASONIC is available (e.g. 9600 baud)

Change baud rate:
The user selects a new baud rate, e.g. 230400 baud.
The ULTRASONIC changes its baud rate, but does not yet store the parameter.
The user sets his PC to the new baud rate.
He repeats the input to change the baud rate (same command as above).
This is the signal to the ULTRASONIC that communication functions at the new baud rate, and it stores the parameter internally.

If the user is unable to set the new baud rate, the ULTRASONIC must be restarted. It will then automatically set the last valid baud rate (here 9600 baud).

Example:

00KY00001<cr>	Opens access key
00BX00103<cr>	ULTRASONIC baud rate changed to 921600 baud 'Set baud rate at PC to 921600baud'
00BX00103<cr>	Repeat command for baud rate. The ULTRASONIC stores the baud rate. This baud rate is loaded with every restart.

When interrogating the baud rate using the command BX, the ULTRASONIC gives back the last programmed baud rate selected either using the command BR or BX.

Range of values 101..103
Initial value: As the initial value for the baud rate the command BR is responsible.

Command BY

<id>BY<para5> Scales the output value of the minimum value of the analogue input PIN WG/RXD+ (analogue channel B)
Access: User mode
Description: The measuring values of the analogue inputs can be output in scaled form. By means of the command BY the output value is stated for 0V input voltage. The value for the parameter BY is calculated as follows:
Parameter value = 30000 + (reference value*10)

See also **Analog inputs** and **Command BZ**.

Command BZ

<id>BZ<para5> Scales the minimum value of the analogue input PIN WG/RXD+(analogue channel B)
Access: User mode
Description: The measuring values of the analogue inputs can be output in scaled form. By means of the command BZ the output value is stated for 9,96V input voltage. The value for the parameter BZ is calculated as follows:
Parameter value = 30000 + (reference value*10)

See also **Analog inputs** and **Command BY**.

Command CA

<id>CA<para5> Calibration value for analogue current/ voltage outputs (slope).
Access: Configuration mode
Description: The initial value of 60000 corresponds to the non-calibrated inclination 1,0000. The difference to the initial value changes the slew rate by 0,1 per mil ($1*10^{-4}$), per increment. The calibration value is below the initial value of 600000, as the internal boost is charged by 1 % too high for balancing the accuracy of the reference and the part variance.

Range of values: 5900..61000
Initial value: Device-dependent

Command CB

<id>CB<para5>	Calibration value for the analogue current/voltage outputs (offset correction)
Access:	Configuration mode
Description:	The initial value of 1000 represents an offset correction of 0. The difference to the initial value adds (value >1000) or subtracts an offset (value <1000) as a multiple of an increment of the 16 bit LSB-value (approx. 15 ppm of FS) as offset to the respective output value.
Value range:	800..1200
Initial value:	Device-dependent

Command CI

<id>CI<para5>	Selects the command interpreter (Command Interpreter)
Access:	User mode
Description:	The ULTRASONIC contains several command interpreters. The THIES command interpreter is active in standard mode. The **Command CI** can be used to change the command interpreter. The command interpreter decides the format of the commands input. "THIES" is selected as the standard command interpreter. It awaits commands in the form:

XXBBnnnnn<CR> Telegram to change a parameter

XXBB<CR> Interrogation telegram

Where
XX = two-position ID (initial value is 00: see **Command CI**).
BB = two-character command identifier
nnnnn = 5-character parameter
<CR> = Carriage return as delimiter

When changing a parameter it should be ensured that the appropriate access key is selected: see **Command KY**.

Parameter description:

0: Standard Thies command interpreter
1: Bayern Hessen command interpreter

Range of values	0..1
Initial value:	0

Command CY

<id>CY<para5>	Scales the minimum value of the analogue input PIN ADIO(analogue channel C)
Access:	User mode
Description:	The measuring values of the analogue inputs can be output in scaled form. By means of the command CY the output value is stated for 0V input voltage. The value for the parameter CY is calculated as follows: Parameter value = 30000 + (reference value*10)

See also **Analog inputs** and **Command CZ**.

Command CZ

<id>CZ<para5>	Scales the output value of the minimum value of the analogue input PIN ADIO (analogue channel C)
Access:	User mode
Description:	The measuring values of the analogue inputs can be output in scaled form. By means of the command CZ the output value is stated for 9,96 V input voltage. The value for the parameter CZ is calculated as follows: Parameter value = 30000 + (reference value*10) See also **Analog inputs** and **Command CY**.

Command DA

<id>DA<para5>	Data request in Bayern Hessen command interpreter
Access:	Enquiry mode
Description:	Requests data in Bayern Hessen format. The command DA complies with the Bayern Hessen specification. It can be used either with or without the measuring instrument address.
Range of values	Depending on measuring instrument addresses selected: see **Command BH**.
Initial value:	No initial value

Command DE

<id>DE<para5>	Standard deviation (Deviation)
Access:	User mode
Description:	Switches calculation of standard deviation on or off. The ULTRASONIC includes an option for calculation of the standard deviation. When calculation is switched on, the standard deviation for the wind direction, velocity and temperature is determined. As calculation of the standard deviation is very time-consuming depending on the averaging period, it can be switched on / off separately. Standard deviation is not active when instantaneous values are output.

Parameter description:

0: standard deviation off
1: standard deviation on

Some standard deviation values are output in telegram 5. All further values are available in the user-defined telegram: see Fixed telegram formats and User-specific telegram.

Range of values	0..1
Initial value:	0

Command DF

<id>DF<para5> Set initial values (Default values)
Access: Configuration mode
Description: Sets all parameters to their initial value.
After this command all parameters of the ULTRASONIC are written to their initial value.

1. ATTENTION: The values in the EEPROM are not overwritten. After a restart the ULTRASONIC reads out the 'old' parameters from the EEPROM.
2. Sets all parameters in EEPROM to the initialisation value.

ATTENTION: EEPROM-parameter are overwritten by the initialisation values.

Range of values: 0..2
Initial value: No initial value

Command DM

<id>DM<para5> Duplex mode
Access: User mode
Description: Duplex mode decides the type of physical connection of the serial interface. In full duplex mode the send and receive signals are each transmitted via separate pairs of cables. This means it is possible to send and receive signals as required.
In half duplex mode transmission of the send or receive signals is via the same pair of cables:
Depending on the setting there are restrictions on the function of the connector PINs of the ULTRASONIC, see **Command AA**, **Command AB**, **Command AC**, **Command TT Serial data output**, **7.1.1**.

Effective from software version V3.10 the independent telegram output can be activated also in half duplex operation. Here, the telegram output is active only after one minute so that in the meantime further commands can be transmitted to the instrument. In case of an instrument-restart the telegram output in half duplex mode, and with independent telegram output the telegram output is activated only one minute after instrument start. With active independent telegram output it might be not possible to communicate with the instrument. A restart is necessary when commands should be transmitted to the instrument. As no data are output within the first minute it is possible to transmit commands to the instrument.

It is only possible to switch from half duplex to full duplex mode with the following prerequisites:

- The PINs WG/RXD- and WR/RXD+ must not be selected as analogue inputs/ analogue outputs see
- see **Command AA**, **Command AB**.

Parameter description:

0: Half duplex mode (RS485, transmission drivers are switched off if no data sent.
1: Full duplex mode (RS485 transmission drivers are switched off if no data sent)
2: Full duplex mode (RS422 transmission drivers are not switched off during intermissions)

Range of values: 0..2
Initial value: 2

Command DV

<id>DV<para5>	Read instrument information
Access:	Only query
Description:	Outputs the instrument version and date-/time information of the firmware.
Value range:	none
Initial value:	none

Command DY

<id>EI<para5>	Effective acoustic length of the Y- measurement path (Distance-Y-path)
Access	Configuration mode
Description:	Effective acoustic distance between the ultrasonic converters North and South. This parameter is set on factory-adjustment and must not be changed.
Range of values	18000…21000
Initial value:	depending on instrument

Command EI

<id>EI<para5>	Analog value in case of error (Error Inversion)
Access:	User key
Description:	Specifies whether 0 or maximum value is output at the analog outputs in the case of error. If the ULTRASONIC establishes a static error during a measurement, it will output an error under certain conditions. This output is designed to prevent the user from interpreting incorrect measured values. If the analog signals of wind direction and wind velocity are used for evaluation, the ULTRASONIC switches the outputs to the maximum or minimum output value in the case of error. This parameter is used to specify whether the minimum or maximum value is output in the case of error.

Parameter description:

0:	Analog outputs are set to maximum in the case of error
1:	Analog outputs are set to 0 in the case of error
2:	In case of error the analogue output of the wind speed is set to 0 In case of error the analogue output of the wind direction is set to maximum

The output in the case of error does not depend on parameter SC: see **Command SC**. Either 0 or maximum is output in the case of error.

Range of values	0..1
Initial value:	0

Command FB

<id>FB<para5> Fast Boot
Access: User mode
Description: The ULTRASONIC is equipped with a boot loader that is called up automatically on startup of the instrument. The function of the boot loader is to load a new program into the memory of the ULTRASONIC. For this purpose the boot loader transmits a specific character string via the RS485 and waits for an appropriate response. If the instrument receives a valid response, the program update starts.
The command FB can be used to order the ULTRASONIC to bypass the boot loader on the next startup. In this case no attempt is made to initiate an update via the RS485. This means that the ULTRASONIC starts its main program more quickly.
Startup behaviour is influenced with the parameter FB.

0: Fast boot switched off. After a restart the THIES-boot loader starts first, the main program afterwards.
1: Fast boot switched on. On system startup the first data telegram is available after 200 ms (averaging switched off).
2: The boot loader suppresses output of the start parameters with 9600 baud (from boot loader- version V1.43).
3: Fast boot switched off. After a restart the X-modem boot loader starts first, the main program afterwards.

In case of a preferably fast system start the parameter SM is set to ‘0’. See also **Command SM** and Storing of system events.

Value range: 0..3
Initial value: 0

Command GU

<id>GU<para5> Maximum value in the averaging buffer (gust acquisition)
Access: User mode
Description: When using mean value buffers, with this parameter the maximum wind velocity and the respective wind direction (gust) can be acquired in the mean value buffer. The value of the command GU indicates the time length of the gust in 100 ms-increments. The gust acquisition is deactivated through GU00000.
For this, see also section **Gust Acquisition**.
Parameter description:

0: gust acquisition deactivated.
>0: Gust acquisition activated. The length of the gust must be less than the preset averaging period.

Example:

AV00003
GU00030

The instrument acquires the maximum gust in the gliding mean value buffer (here 1 minute). The gust value is the mean value from 3 seconds. All values in the averaging buffer are checked gradually. The acquisition of the gust is carried out after each measurement.

Value range: 0..30
Initial value: 0

Command HC

<id>HC<para5>	Voltage threshold for heating suppression (Heating Control)
Access:	User mode
Description:	With this parameter the minimum supply voltage, when the heating control is activated, is stated in volt. If the supply voltage falls below this value, the heating is de-activated respectively switched off. Effective from firmware V3.09 and the hardware-revision V08-08 the parameter is supported. By means of the command (ID) PW it might be determined if the available instrument supports this option. If (ID) PW returns a numerical value, the heating control is supported. If the heating control is not supported, the instrument responses with the output: ”System power ctrl not supported“
Value range:	5..48
Initial value:	10

Command HL

<id>HL<para5>	Lower threshold temperature for switching the heating (Heating low)
Access:	User mode
Description:	This parameter is used to indicate the lower threshold temperature for the heating control for HT00001. If the acoustic virtual-temperature falls below this value the heating is switched on. Input is performed in Kelvin. 0 °C -> 273Kelvin; 2°C -> 275Kelvin
Value range:	220K..320K
Initial value:	275

Command HH

<id>HH<para5>	Upper threshold temperature for switching the heating (Heating hight)
Access:	User mode
Description:	This parameter is used to indicate the upper threshold temperature for the heating control for HT00001. If the acoustic virtual temperature exceeds this value the temperature criterion for activating the heating is not satisfied. In case all other criterions for de-activating the heating are satisfied, the heating is switched off. Input is performed in Kelvin. 0 °C -> 273Kelvin; 7°C -> 280Kelvin
Value range:	220K..320K
Initial value:	280

Command HT

<id>HT<para5> Heating control (Heating)
Access: User mode
Description: To prevent freezing-up the ULTRASONIC is equipped with an effective heating system that heats the sensor arms and the ultrasonic converters, if necessary. The command HT can be used to influence the heating function. The heating is switched on clocked, in order to avoid a response of the electric overload protection in the external power supply unit of the instrument on activation of the heating. The basis for this is a pulse duration of 100 ms. On start-up the ratio between switched-on heating to switched-off heating is 1:100. After every further 100 ms this ratio shifts 5 ms towards switched-on heating. After 2 seconds the heating is completely on. Instruments with PTC heating also have clocked activation.

Time after switch-on[ms]	Time heating on	Time heating off
0	1	99
100	6	94
200	11	89
...	...	...
1900	96	4
2000	Completely on	

Table 11: Pulse control factor with switch-on of heating

Parameter description:

0: heating permanently off
1: heating software-controlled by virtual-temperature
2: heating permanently on
3: Heating software-controlled by virtual-temperature and housing temperature
4: Heating software-controlled by virtual-temperature and housing temperature
5: Heating software-controlled by virtual-temperature and housing temperature
6: The heating is immediately switched on permanently but not clocked.

Remark:

Detailled description ref to „heating control“ chapter 7.6.

Command ID

<id>ID<para5>	ULTRASONIC ID
Access:	User mode
Description:	This command is used to specify the ID of the ULTRASONIC when the parameter XI is set to 0: see **Command XI**. The ID is used in every telegram of the ULTRASONIC when the command interpreter 'THIES' is selected: see **Command CI**. After the ID has been changed, the ULTRASONIC immediately responds to the new identifier. The ID 99 is an extended ID. The ULTRASONIC always responds to commands with the ID 99 (with the correct baud rate). The ID 99 must not be used in bus mode. Example:

00KY00001	Open with user key
00ID00023	Change ID from 0 to 23
!23ID00023	ULTRASONIC acknowledges change
23DM	Interrogation of duplex mode with new ID
!23DM00000	Response from ULTRASONIC
23ID00000	Change ID from 23 to 0
!00ID00000	ULTRASONIC acknowledges change

Range of values	0..99
Initial value:	0

Command IT

<id>IT<para5>	Internal temperature of housing
Access:	Interrogation mode
Description:	Returns the internal temperature of housing in 0.1°. The resolution of temperature is approx. 0.1°C. A value of 256 means 25,6°C. The internal temperature of housing is used for heating control. The time constant for adjusting the internal temperature of housing to the outside temperature is approx. 20 min. The internal temperature of housing can be used with all instruments effective from delivery date October 2009, and software version V3.10.

Command KY

<id>KY<para5>	Access mode (Key)
Access:	Enquiry mode
Description:	To change the parameters of the ULTRASONIC access authorisations are necessary for most commands. This prevents any accidental change in parameters. Access takes place on three levels: • Enquiry mode • User mode • Configuration mode

Parameter description:

0:	Enquiry mode Parameters which have no access restrictions are those not stored in the EEPROM, e.g. cyclic telegram enquiry or output of system status.
00001:	User mode (USER ACCESS) The user key protects parameters, which influence the behaviour of the ULTRASONIC, e.g. averaging period and baud rate. The user can change these parameters but he must realise that a change of the parameter will alter the behaviour of the ULTRASONIC. Before every change it is recommended using the command SS to output and save the current configuration.
xxxxx:	Configuration mode (CONFIG ACCESS)

Parameters protected with this key should not be changed. They are partly set on adjustment of the instrument at the factory. If these parameters are misadjusted, full malfunction may result. For the sake of completeness these parameters are included in this documentation although they should not be changed.

After a restart the system is always switched to the enquiry mode. If a command is entered incorrectly or an invalid command input, the ULTRASONIC immediately sets the access mode to the enquiry mode.

Range of values 0;1; xxxxx
Initial value 0

Command MA

<id>MA>>para5> Automatic adjustment of measured value acquisition (Measurement Automation)
Access: User mode
Description: Specifies whether the measuring interval MA is automatically changed when an incorrect measurement is identified: see **Command MD**.

Parameter description:

0: An incorrect measured value identified during the plausibility check has no influence on the interval for the acquisition of measured values.

>0: An incorrect measured value identified during the plausibility check causes the measuring interval to be set to the selected value and measurement performed with this frequency in the case of error. With error the parameter MA, divided by 10, replaces the measured value interval selected using the parameter MD. If MD (multiplied by 10) and MA have the same value, the measuring velocity does not change in the case of error.
The measuring interval is reset when 4 consecutive data records contain no error.

Range of values 0..100
Initial value 30

Command MD

<id>MD>>para5> Measuring interval (Measurement Delay)
Access: User mode
Description: Specifies the time in ms waited between two ultrasonic pulses. The ULTRASONIC is designed so that it cyclically measures the path run times of the individual paths. The parameter MD specifies how long the period between two ultrasonic pulses is. In standard mode this time is 10 ms, so that every 20 ms a complete data record is made from all sensors. If the ULTRASONIC identifies an incorrect measurement, the value MD can be set to 0, i.e. the send pulses directly follow each other: see **Command MA**. If for example a sensor is blocked, the change from MD to MA is identified by the higher repetition frequency of the pulses given off by the ULTRASONIC.

Range of values 0..1000
Initial value: 5

Command OH

<id>ZB<para5> Operating hours counter (Operational Hours)
Access: Query mode
Description: The operation hours counter states the actually accumulated operating hours of the instrument as 5-digit-number. Hence, a maximum of 99999 hours of operating time can be counted without carryover. This corresponds to a period of approx. 11,4 years.
The counter reading remains, of course, in case of power failure or de-installation of the instrument.

Initial value: 0

Command OR

<id>OR<para5> Telegram output interval (Output Rate)
Access: User mode
Description: With independent telegram output this parameter is used to specify the time interval in which telegrams are output via the serial interface. Specification is made in milliseconds. If the output speed is higher than the data can be transmitted, the available output is discarded. If the output is faster than acquisition of the measured values, the measured values available are output again.
If the averaging is switched off AV=0 (see Command AV), the averaging period equals the output interval regardless of whether independent telegram output is selected.
Independent telegram output is only possible in full duplex mode.
See also **Independent telegram output**, **Command TT**, **Command DM**.

Parameter description:

0: A telegram is always output when the internal acquisition of measured values has calculated a new data record.
1..60000 Gives the output interval in milliseconds.

Range of values 0..60000 [ms]
Initial value: 100

Command OS

<id>OS<para5> Scaling of wind velocity output (Output Scale)
Access: User mode
Description: This command is used to specify in which unit of measurement the wind velocity is output in the serial telegram. Different units of measurement are available for this purpose.

Parameter description:

Parameter	Unit of measurement	Conversion factor related to m/s
0	m/s	1
1	km/h	1m/s => 3.6 km/h
2	miles/h	1m/s => 2.236936292 miles/h
3	knots	1m/s => 1.94253590 kn

Table 12: Conversion factors between different wind velocities

Range of values 0..3
Initial value: 0

Command PC

<id>PC<para5>	Plausibility test (Plausibility check)
Access:	User mode
Description:	Switches the plausibility checks on/off. Every measured value is checked when Plausibility is switched on. It is checked whether the measured value is plausible and whether it fits into the sequence of measured values acquired. If this is the case, it is released for further processing. If this is not the case, the measured value is discarded. In the standard configuration this has the following effects: • The heating is switched on: see **Command HT**. • The measured value acquisition interval is set to the value of MA: see **Command MD**.
Range of values	0..7
Initial value:	7

Command PR

<id>PR<para5>	Periodic receive time (Receive Time)
Access:	Configuration mode
Description:	This value sets the receive time period in the serial register in the analog section of the ULTRASONIC. This value must not be changed under any circumstances. It is factory-set.
Range of values	13..99
Initial value:	depending on instrument
Unit:	100 ns

Command PT

<id>PT<para5>	Periodic time transmitter (Period Transmit Time)
Access:	Configuration mode
Description:	The value sets the transmit time period in the serial register in the analog section of the ULTRASONIC. This value must not be changed under any circumstances. It is factory-set.
Range of values	13..99
Initial value:	depending on instrument
Unit:	100 ns

Command PW

<id>PW<para5>	System voltage (Power)
Access:	User mode
Description:	Returns the measured supply voltage in Volt. Effective from software version V3.09 and hardware 08-08 the parameter is supported. If the available instrument does not support the measurement of the supply voltage, the text „System power ctrl not supported“ is output on inquiry.

Command RC

<id>RC<para5>	Correction factor for analog input values (Reference Correction)
Access:	Configuration mode
Description:	The command specifies a correction factor in 10ppm for the measured values of the analog inputs. The value is factory-adjusted and must not be changed.
Range of values	0…1000
Initial value:	Device-dependent

Command RD

<id>RD<para5>	Response delay
Access:	User mode
Description:	The command delays the response, after a command via the serial interface, by the mentioned time in ms.
Range of values	0...1000
Initial value:	5
Unit:	ms

Command RF

<id>RF<para5>	Restart with invalid measuring values (Restart at fail)
Access:	User mode
Description:	By this command it is determined after which period the ULTRASONIC carries out a restart, in case no valid data have been measured. A parameter value of 0 inactivates the function. A restart is triggered only in case no valid measuring value has been acquired within the stated time interval.
Range of values	0; 10...1000
Initial value:	60
Unit:	Seconds

Command RP

<id>RP<para5>	Read parameter data set
Access	User mode
Description	With this command a pre-stored data set can be loaded; see also **Command SP**. After loading a restart is carried out automatically. The data set with the index ‘0’ contains the parameters on delivery and cannot be overwritten. The data sets ‘1’ and ‘2’ are available for use.
Range of values	0..2

Command RS

<id>RS<para5> Restart ULTRASONIC (Reset)
Access: User mode
Description: With transmission of this command the ULTRASONIC watchdog is no longer operated. This results in a cold start after approx. 2 sec. The ULTRASONIC performs a complete restart.

Parameter description:

1: The ULTRASONIC performs a cold start. It behaves as after connection of the supply voltage.

Range of values 1
Initial value: No initial value

Command SC

<id>SC<para5> Minimum value of analog outputs (Start Current)
Access: User mode
Description: When using analog outputs the minimum value to be output can be selected. This does not influence the terminal value of the outputs. The minimum value is 0% or 20% of the terminal value. Depending on the parameter AN the selected minimum value is converted to a current or voltage value. This provides for current and voltage outputs with 0..20 mA, 4..20 mA, 0..10 V, and 2..10 V: see **Command AN**.
See also: **Command AA**, **Command AB**.

Parameter description:

0: Minimum value 0 % of maximum value
1: Minimum value 20 % of maximum value

Together with the parameter AN the analog outputs can be configured as follows:

	Parameter SC=0	Parameter SC=1
Parameter AN=0	0..10V	2..10V
Parameter AN=1	0..20mA	4..20mA

Parameter AA= 0; AB = 0

Table 13: Configuration of analog outputs WV/RXD- and WD/RXD+ with parameters AN and SC

Range of values 0..1
Initial value: 0

Command SE

<id>SE<para5> Output of the stored system information (system event)
Access: Query mode
Description Returns the stored system information. There are 178 entries available, before the eldest entries of the circular buffer are overwritten. Events are stored which have been activated by the command SM. See **Command SM**.

Command SH

<id>SH<para5>	Serial number (High Word) (Serial number High word)
Access:	Configuration mode
Description:	During factory adjustment of the ULTRASONIC every ULTRASONIC is given a serial number. This serial number allows the ULTRASONIC to be clearly identified. Storage of the serial number is divided up into high and low bytes. The serial number must not be changed.
Range of values	0..65535

Command SL

<id>SH<para5>	Serial number (Low Word) (Serial number Low word)
Access:	Configuration mode
Description:	During factory adjustment of the ULTRASONIC every ULTRASONIC is given a serial number. This serial number allows the ULTRASONIC to be clearly identified. Storage of the serial number is divided up into high and low bytes. The serial number must not be changed.
Range of values	0..65535

Command SM

<id>SM<para5>	Mask for storing of system information (System event Mask)
Access	User mode
Description	Gives the mask for writing system information into the system memory. If the respective valance is set in the mask, the related events are written into the system event memory. The following events can be selected:

1: System start
2: Closing up in configuration mode
4: Description of internal registers PR and PT
8: No valid data over a longer period
16: Averaging buffer fill level < 2 increments (basis is the value from the extended status)

When the parameter is set to ‘0’ the system memory is switched off.

The mask value is the sum of the system information which have to be stored.
The value ‘5’ for ex., stored the events ‘ system start’ and ‘Description of internal registers PR and PT’.

A value of SM > 0 delays the boot procedure for approx. 200 ms. This should be taken into consideration when using ‘Fastboot’, see **Storing of System Events**.

Range of values	0..255
Initial value	0

Command SP

<id>SP<para5>	Store parameter data set
Access:	User mode
Description:	A data set can be stored by this command. All parameters are stored internally and can be reloaded by RP, see **Command RP**. The data set with index ‘0’ contains the parameters on delivery and cannot be overwritten. The data sets ‘1’ and ‘2’ are available for use.
Range of values	0..2

Command SS

<id>SS<para5>	System status (System Status)
Access:	Enquiry mode
Description:	Outputs the selected parameters of all commands. All parameters stored in the EEPROM are output here. Before parameters of the ULTRASONIC are changed, this command should be used to generate and save a list of the selected parameters, e.g. by copying parameters to a text file.

Parameter description:

No parameter is necessary when using the command SS. Callup with selected instrument - ID 00 is as follows:
00SS<cr> with <cr> Carriage return (Enter key)

Range of values	No value range
Initial value:	No initial value

Command SV

<id>SV<para5>	Software version (Software Version)
Access:	Enquiry mode
Description:	This command reads out the current software version and gives it back. For interpretation the version output must be divided by 100. The output value 00SV00123 represents version V1.23. '1' means the main version, 23 is the build label.

Command TB

<id>TB<para5>	Telegram in burst mode
Access:	Interrogation mode
Description:	The command TB is used to select the telegram which outputs the data after a burst measurement ends. All data telegrams are permissible. See also **Command TR**.
Range of values	1..13
Initial value:	2

Command TF

<id>TF<para5>	Transformer for generating acoustic signals (Transformer)
Access:	configuration mode
Description:	Indicates the type of the used transformer for generating the analogue signals.
Range of values	0..1 h
Initial value:	instrument-dependent

Command TN

<id>TN<para5>	Propagation time delay north sensor (Sensor delay NORTH sensor)
Access:	Configuration mode
Description:	Instrument-dependent delay time of sensor. This parameter is set on factory adjustment and must not be changed.
Range of values	0..FFFh
Initial value:	0

Command TR

<id>TR<para5>	Telegram request (Transmit request)
Access:	Enquiry mode
Description:	The command TR is used to specifically request a telegram from the ULTRASONIC. After interpretation the ULTRASONIC sends back the requested telegram. The instrument specifies a series of predefined telegrams, as well as option for the user to configure his own telegram: see Fixed telegram formats, User-specific telegram. In half duplex mode the command TR is the sole option for requesting measured values via the RS 485 interface. The response time of the ULTRASONIC with a telegram request is defined as follows: The time interval after receipt of the last character until transmission of the first character of the response telegram is also < 1 ms with standard deviation switched on (measured at RXD+ and TXD+ of RS485).

Parameter description:

1:	VD telegram (wind velocity, wind direction)
2:	VDT telegram (wind velocity, wind direction, virtual temperature)
3:	V4DT telegram (wind velocity, wind direction, virtual temperature)
4:	NMEA V2.0
5:	VDT with standard deviation values
6:	User-defined telegram
7:	Velocity components Vx and Vy
8:	VD Telegram Variant 1
9:	VDT Telegram Variant 1
10..13:	reserved
12:	Scientific diagnostic telegram
14:	NMEA V2.0
16:	User-defined telegram with error codes

Range of values	1..16
Initial value:	No initial value

Command TS

<id>TS<para5>	Sensor Time delay SOUTH Sensor
Access:	Configuration mode
Description:	Instrument-dependent time delay of the sensor. This parameter is factory-set and must not be changed.
Range of values	0...4096
Initial value:	depending on instrument

Command TT

<id>TT<para5>	Autonomous telegram output (Telegram Transmission)
Access:	User mode
Description:	Determines the number of the telegram, which the ULTRASONIC sends cyclic-autonomously. The telegrams available are the same as specified under **Command TT**, **Command OR** determines the time interval for transmitting the telegrams. The autonomous transmission is possible only in full-duplex mode, see **Command DM**. If TT = 0, the autonomous telegram output is switched off.
Range of values	0...16
Initial value:	0

Command UA

<id>UA<para5>	Addition of characters to user-defined telegram (Add User telegram item)
Access:	Enquiry mode
Description:	In the user-specific telegram this command can be used to add a new definition to the end of the telegram: see, User-specific telegram, **Command US**. The data generated can be interrogated using the command TR00006 or TT00006: see also **Command TR**, **Command TT**.
Range of values	Character string
Initial value:	No initial value

Command UD

<id>UD,<para5>	User-defined text (User data)
Access	User mode
Description	The instrument provides a data buffer of 32 texts with 32 signs each, where any text can be stored. By the command UD this buffer is administered. The format of entry is 00Udn,xxxx with n: index 1..32 xxxx: text with a maximum length of 32 signs query: 00UD returns all user-specific texts, for ex. 01: THIES ULTRASONIC 03: LOCATION WASSERKUPPE 00UDn with 0<n<33 returns the text with index ‘n’ See also Administration of User Information
Range of values	character string
Initial value	no initial value

Command UR

<id>UR<para5>	Deletion of one or more definitions at the end of the user-defined telegram (Remove User telegram item)
Access:	Enquiry mode
Description:	This command can be used to delete one or more definitions from the end of the user-defined telegram. The ULTRASONIC internally splits the character strings given to it into separate definitions. For example, the output of a variable is always an independent definition. This command can be used to delete definitions step by step: see also User-specific telegram, **Command US**. The data generated can be interrogated using the command TR00006 or TT00006: see also **Command TR**, **Command TT**.

Parameter description:

0..30	Number of definitions to be deleted at the end of the user-specific telegram.

Range of values	0..30
Initial value:	No initial value

Command US

<id>US<para5>	Save user-specific telegram definition (User telegram Save)
Access:	User mode
Description:	This command can be used to store the current definition of the user-specific telegram in the EEPROM. All changes made with the commands UA, UR and UT are not permanently saved. The command US is used to store definitions in the EEPROM. The data generated can be interrogated using the command TR00006 or TT00006: see also **Command TR**, **Command TT**.

Parameter description:

2:	Saves the telegram definition in the internal EEPROM.

Range of values	2
Initial value:	No initial value

Command UT

<id>UT<para5>	User-specific telegram (User Telegram)
Access:	Enquiry mode
Description:	This command can be used to create a new definition of the user-specific telegram. Any existing definition is overwritten: see also User-specific telegram, **Command US**. The data generated can be interrogated using the command TR00006 or TT00006: see **Command TR**, **Command TT**.

Range of values	Character string
Initial value:	No initial value

Command VC

<id>VC<para5>	Constant velocity correction (Velocity Correction)
Access:	Configuration mode
Description:	Specifies the factor used to correct the velocity. Specification is made "per mil". This factor must not be changed.
Range of values	0..2000
Initial value:	1055

Command XI

<id>XI<para5>	External ID (External ID)
Access:	User mode
Description:	When set, the instrument ID is determined via the external lines WV/RXD- (BIT 0), WD/RXD+ (BIT 1) and ADIO (BIT 2). Here the channels must be configured accordingly. See **Command AA**, **Command AB**, **Command AC**. On start-up the ULTRASONIC reads in the ID and stores it in the EEPROM. Reprogramming of the ID is output via the RS485 as a command sequence on start-up. If the parameter is set to 0, the ULTRASONIC reads its ID out from the internal EEPROM.

Parameter description:

0:	ULTRASONIC reads ID from internal EEPROM
1:	ULTRASONIC reads ID from external lines

Range of values	0..1
Initial value:	0

11 Appendix 1 Predefined data telegrams

11.1 Telegram 1 VD

Wind speed and wind direction

Command: TR1 Command: TT1

Telegram construction: (STX)xx.x xxx*xx(CR)(ETX)				**Telegram output in case of error**			
No.	Character	Function	Value	No.	Character	Function	Value
1	STX	Start of Text	02h	1	STX	Start of Text	02h
2	nn.n	Wind velocity		2	„FF.F“	Wind velocity	
6		Blank character	20h	6		Blank character	20h
7	nnn	Wind direction		7	„FFF“	Wind direction	
10	*	Check sum identifier	2Ah	10	*	Check sum identifier	2Ah
11	nn	Check sum hexadecimal (2..9)		11	nn	Check sum hexadecimal (2..9)	
13	CR	Carriage Return	0Dh	13	CR	Carriage Return	0Dh
14	ETX	End of Text	03h	14	ETX	End of Text	03h

11.2 Telegram 2 VDT

Wind speed, wind direction, acoustic-virtual temperature

Command: TR2 command: TT2

Telegram construction: (STX)xx.x xxx xxx.x xx*xx(CR)(ETX)				**Telegram output in case of error**			
No.	Character	Function	Value	No.	Character	Function	Value
1	STX	Start of Text	02h	1	STX	Start of Text	02h
2	nn.n	Wind velocity		2	FF.F	Wind velocity	
6		Blank character	20h	6		Blank character	20h
7	nnn	Wind direction		7	FFF	Wind direction	
10		Blank character	20h	10		Blank character	20h
11	±nn.n	Temperature		11	±FF.F	Temperature	
16		Blank character	20h	16		Blank character	20h
17	nn	Status value hexadecimal		17	nn	Status value hexadecimal	
19	*	Check sum identifier	2Ah	19	*	Check sum identifier	2Ah
20	nn	Check sum hexadecimal (2..18)		20	nn	Check sum hexadecimal (2..18)	
22	CR	Carriage return	0Dh	22	CR	Carriage return	0Dh
23	ETX	End of Text	03h	23	ETX	End of Text	03h

11.3 Telegram 3 V4DT

Wind speed, wind direction, acoustic-virtual temperature

Command TR3 Command: TT3

Telegram construction: (STX)xxx.x xxx xxx.x x xx*xx(CR)(ETX)				**Telegram output in case of error**			
No.	Character	Function	Value	No.	Character	Function	Value
1	STX	Start of Text	02h	1	STX	Start of Text	02h
2	nnn.n	Wind velocity		2	FFF.F	Wind velocity	
7		Blank character	20h	7		Blank character	20h
8	nnn	Wind direction		8	FFF	Wind direction	
11		Blank character	20h	11		Blank character	20h
12	±nn.n	Temperature		12	±FF.F	Temperature	
17		Blank character	20h	17		Blank character	20h
18	n	K, N, M, S = km/h, Knots, m/s, mph		18	n	K, N, M, S = km/h, Knots, m/s, mph	
19		Blank character	20h	19		Blank character	20h
20	nn	Status value hexadecimal		20	nn	Status value hexadecimal	
22	*	Check sum identifier	2Ah	22	*	Check sum identifier	2Ah
23	nn	Check sum hexadecimal (2..18)		23	nn	Check sum hexadecimal (2..18)	
25	CR	Carriage return	0Dh	25	CR	Carriage return	0Dh
26	ETX	End of Text	03h	26	ETX	End of Text	03h

11.4 Telegram 4 NMEA

NMEA V 2.0

Command: TR4 Command TT4

Telegram construction: $WIMWV,xxx.x,R,xxx.x,N,A*xx(CR)(LF)				**Telegram output in case of error**			
No.	Character	Function	Value	No.	Character	Function	Value
1	$	Dollar	24h	1	$	Dollar	24h
2	W		57h	2	W		57h
3	I		49h	3	I		49h
4	M		4Dh	4	M		4Dh
5	W		57h	5	W		57h
6	V		56h	6	V		56h
7	,	Comma	2Ch	7	,	Comma	2Ch
8-12	nnn.n	Wind direction		8	,	Comma	2Ch
13	,	Comma	2Ch	9	R		52h
14	R		52h	10	,	Comma	2Ch
15	,	Comma	2Ch	11	,	Comma	2Ch
16-20	nnn.n	Wind velocity		12		K, N, M, S = km/h, Knots, m/s, mp	
21	,	Comma	2Ch	13	,	Comma	2Ch
22		K, N, M, S = km/h, Knots, m/s, mp		14	V	V = invalid	

23	,	Comma	2Ch	15	*	Check sum identifier	2Ah
24	A, V	A = valid, V = invalid		16	nn	Check sum hexadecimal (2..14 inclusive)	
25	*	Check sum identifier		18	CR	Carrige return	0Dh
26-27	nn	Check sum hexadecimal (2..24 inclusive)		19	LF	Line Feed	0Ah
28	CR	Carriage return	0Dh				
29	LF	Line Feed	0Ah				

11.5 Telegram 5 VDT, Standard deviation

Standard deviation

When using the standard deviation the VDT telegram is extended by the standard deviation of the wind speed.

Command: TR5 Command: TT05

Telegram construction: **(STX)xx.x xx.x xxx xxx xxx.x xxx.x xx*xx(CR)(ETX)**				**Telegram output in case of error** **The telegram format corresponds to the data telegram with respective status value.**
No.	Character	Function	Value	
1	STX	Start of Text	02h	
2	nn.n	Wind velocity		
6		Blank character	20h	
7	nnn	Wind direction		
10		Blank character	20h	
11	±nn.n	Temperature		
16		Blank character	20h	
17	nn.n	Wind velocity (Standard deviation)		
21		Blank character	20h	
22	±nn.n	Temperature (Standard deviation)		
27		Blank character	20h	
28	nn	Status value hexadecimal		
30	*	Check sum identifier	2Ah	
31	nn	Check sum hexadecimal (1..33)		
33	CR	Carriage return	0Dh	
34	ETX	End of Text	03h	

11.6 Telegram 8 VD Variant 1

Wind speed and Wind direction Variant 1

Command: TR8 Command: TT8

Telegram construction: (STX)xx.x.xxx*(CRLF)(ETX)				**Telegram output in case of error**			
No.	Character	Function	Value	No.	Character	Function	Value
1	STX	Start of Text	02h	1	STX	Start of Text	02h
2	nn.n	Wind velocity X		2	FF.F	Wind velocity X	
6		Blank character	20h	6		Blank character	20h
7	nnn	Wind direction		7	FFF	Wind direction	
10	*	Check sum identifier	2Ah	10	*	Check sum identifier	2Ah
11	nn	Check sum hexadecimal (2..9)		11	nn	Check sum hexadecimal (2..9)	
13	CR	Carriage Return	0Dh	13	CR	Carriage Return	0Dh
14	LF	Line Feed	0Ah	14	LF	Line Feed	0Ah
15	ETX	End of Text	03h	15	ETX	End of Text	03h

11.7 Telegram 9 VDT Variant 1

Wind speed, Wind direction, acoustic-virtual temperature, status and check sum (type 2)

Command: TR9 Command: TT9

Telegram construction: !iivvvdddttttwfR			
No.	Character	Character repertoire	Function
1	!		Response character
2	i	0 ••• 9	Instrument ID
3	i	0 ••• 9	Instrument ID
4	v	0 ••• 9	Wind velocity * 10^{1} m/s
5	v	0 ••• 9	Wind velocity * 10^{0} m/s
6	v	0 ••• 9	Wind velocity * 10^{-1} m/s
7	d	0 ••• 9	Wind direction * 10^{2} Grad
8	d	0 ••• 9	Wind direction * 10^{1} Grad
9	d	0 ••• 9	Wind direction * 10^{0} Grad
10	t	+ ••• −	Sign
11	t	0 ••• 9	Temperature *10^{1} °C
12	t	0 ••• 9	Temperature * 10^{0} °C
13	t	0 ••• 9	Temperature * 10^{-1} °C
14	w	ASCII	Status byte, see 7.4.6.4
15	f	ASCII	Check sum (type2) 1

11.8 Telegram 11 VDT Variant 2

Wind velocity, wind direction, and acoustic-virtual temperature

Command: TR11 Command: TT11

Telegram construction: (STX)xx;xx.x;xxx;xxx.x;xxxx*xx(CR)(LF)(ETX)				**Telegram output in case of error**			
No.	Character	Function	Value	No.	Character	Function	Value
1	STX	Start of Text	02h	1	STX	Start of Text	02h
2	nn	ID		2	FF	ID	
4	;	Semicolon		4	;	Semicolon	
5	nn.n	Wind velocity		5	FF.F	Wind velocity	
9	;	Semicolon		9	;	Semicolon	
10	nnn	Wind direction		10	FFF	Wind direction	
13	;	Semicolon		13	;	Semicolon	
14	±nn.n	Temperature		14	±FF.F	Temperature	
19	;	Semicolon		19	;	Semicolon	
20	nnnn	Status value (extended status)		20	nnnn	Status value (extended status)	
24	*	Star		24	*	Star	
25	nn	Check sum hexadecimal (2..23)		25	nn	Check sum hexadecimal (2..23)	
27	CR	Carriage Return	0Dh	27	CR	Carriage Return	0Dh
28	LF	Line Feed	0Ah	28	LF	Line Feed	0Ah
29	ETX	End of Text	03h	29	ETX	End of Text	03h

11.9 Telegram 12 Scientific Telegram

Scientific Diagnostic Telegram

Command: TR12 Command: TT12

Telegram construction: WG;WR;VT;V13; T13; C31; C42; C13; N1;N2;N3;N4;TS;TC	
WG	Wind speed (7,2;)
WR	Wind direction (6,2;)
VT	Virtual temperature (6,2;)
V13	Speed of distance 13 (7,2;)
T13	Virtual temperature of distance 13 (7,2;) (last measured value in averaging interval; -273,15 in case of no valid value)
C31	Measuring value run-time Converter 3 in direction Converter 1 (south- north direction) (5;)
C42	Measuring value run-time Converter 4 in direction Converter 2 (west- east direction) (5;)
C13	Measuring value run-time Converter 1 in direction Converter 3 (north- south direction) (5;)
N1	Internal counter (5;)
N2	Time interval, where the values are written into the main average memory (5;)
N3	Number of values in the main average memory (5;)
N4	THIES Status (2h;)
TS	Telegram status, see **7.4.6.1 Extended status information** (hexadecimal display) (4h;)
TC	Internal tick count in ms of the processor (9;\r\n)

Signification (7,2;) (x;y)
X=> Number of digits in the telegram
Y=> Number of decimal places

for ex. (7;2;)
0000.00;

11.10 Telegram 13 VDT Variant 3

Wind velocity, wind direction, and acoustic-virtual temperature
Command: TR13 Command: TT13

Telegram construction: (STX)xx;xx.x;xxx;xxx.x;xxx.x;xxxxx;xxxx*xx (CR)(LF)(ETX)				**Telegram output in case of error**			
No.	Character	Function	Value	No.	Character	Function	Value
1	STX	Start of Text	02h	1	STX	Start of Text	02h
2	nn	ID		2	FF	ID	
4	;	Semicolon		4	;	Semicolon	
5	nn.n	Wind velocity (vectorial)		5	99.9	Wind velocity (vectorial)	
9	;	Semicolon		9	;	Semicolon	
10	nnn	Wind direction		10	999	Wind direction	
13	;	Semicolon		13	;	Semicolon	
14	±nn.n	Temperature		14	±99.9	Temperature	
19	;	Semicolon		19	;	Semicolon	
20	±nn.n	Wind velocity Vy		20	±99.9	Wind velocity Vy	
25	;	Semicolon		25	;	Semicolon	
26	nnnnn	Number of mean values		26	99999	Number of mean values	
31	;	Semicolon		31	;	Semicolon	
32	nnnn	Status value (extended status)		32	9999	Status value (extended status)	
36	*	Star		36	*	Star	
37	nn	Check sum hexadecimal (2..32 inclusive)		37	nn	Check sum hexadecimal (2..32 inclusive)	
39	CR	Carriage Return	0Dh	39	CR	Carriage Return	0Dh
40	LF	Line Feed	0Ah	40	LF	Line Feed	0Ah
41	ETX	End of Text	03h	41	ETX	End of Text	03h

12 Technical data

Wind velocity	Measuring range	0...75 m/s (Starting threshold: 0,01 m/s) Scaling of analog output freely selectable	
	Accuracy	<= 5 m/s:	± 0,1 m/s (rms, mean over 360°)
		> 5 m/s:	± 2% of meas. value (rms, mean over 360°)
	Resolution	0,1 m/s:	In the telegrams: 00001 to 00005, 00008 to 00009 00011 to 00013
		<0,1 m/s:	in the user-defined telegrams: (00006)
Wind direction (direction of flow)	Measuring range	1°; 181°	
Virtual temperature	Measuring range	- 50 .... + 70 °C	
	Accuracy	± 0.5 K to 35 m/s	
	Resolution	0.1 K (in the telegrams 00001 to 00005, 00008, 00009 00011 to 00013)	
Data output digital	Interface	RS 485 / RS 422	
	Baud rate	1200, 2400, 4800, 9600, 19200, 38400, 57600, 115200, 230400, 460800, 921600 adjustable	
	Output	Instantaneous values, wind velocity / direction and acoustic-virtual temp. Sliding mean values 0.5 sec..100 min freely selectable Standard deviation for wind velocity and acoustic-virtual temp. Predefined data telegrams or user-defined data telegram	
	Output rate	1 per 1msec to 1 per 60 seconds adjustable	
	Status identification	Heating, failure of measurement path	
Data output analogue	Electr. output	0 ...+ 20 mA / 0... +10 V or 4... +20 mA / 2... +10 V Wind velocity, wind direction and virt. temperature	
		Burden on current output maximum 400Ω	
		Burden on voltage output minimum 4000Ω	
	Output	Instantaneous values Sliding mean values 0.5sec..100min freely selectable	
	Output rate	Updating rate 1 per 100 msec	
	Resolution	16 bit	
Analogue inputs	Number	Up to three analog inputs possible (3 x standard, 2 x add. Configurable after consulting manufacturer)	
	Resolution	16 bit	
	Sampling rate	0,1 Hz.. 100 Hz per channel	
	Input range	0V to + 10,0V	
	Data processing	Output of measured values in user-specific telegram	
	Accuracy	±1,0% of meas. value in the range –40°C ... +70°C	
	Linearity integral Effective noise free bits	INL: typ. < 6 LSB Typ. 14 bit* *with DC-supply for avoiding dynamic crosstalk in the connecting line	

General	Internal measuring rate	Up to 400 measurements per second at +20 °C
	Bus mode	Bus mode with up to 99 instruments possible
	Program update	Program update possible in bus mode
	Temperature range	Operating temperature – 50°C... + 80°C heated – 30°C... + 80°C unheated Storing – 50°C... + 80°C Measuring operation possible with heating up to - 75°C
Operating voltage	Supply electronics	8 V.. to 42 V DC typ. 1,5 VA, max. 2,5 VA 12 V to 28 V AC typ. 1,5 VA, max. 2,5 VA
	Supply heating	24 V AC/DC +-15%: typ. 45 VA, max. 60 VA @ 24 V
	Protection	IP 67
Operating voltage	Supply electronics - w/o heating operation	U: 8...78 V DC or 12...55 V AC, 45…65Hz P: typ. 1,5 VA, max. 2,5 VA
	Supply: electronics + heating - with heating operation of US-arms	U: 24V AC/DC ±15%, 45…65Hz P: typ. 40 VA, max. 50 VA @ 24V
W/o US converter heating	Icing resistance	Acc. to THIES STD 012001
With US converter heating	Icing resistance	Acc. to THIES STD 012002
	Housing material	Stainless steel (V4A)
	Mounting type 4.3865.xx.xxx 4.3866.xx.xxx 4.3867.xx.xxx	 Flange plate with boring Flange plate with boring Bottom for Mast tube ½”
	Connection type 4.3865.xx.xxx 4.3866.xx.xxx 4.3867.xx.xxx	 Screwed Cable Gland with 5m cable 8-pole plug 8-pole plug
Dimension		See Dimesion Drawing
	Protection	IP 67 (in case of conventional mounting and screwed and converted coupling socket (if necessary), see chapter „Preparation for operation“)
	Weight	2.5 kg

13 Dimension Drawing

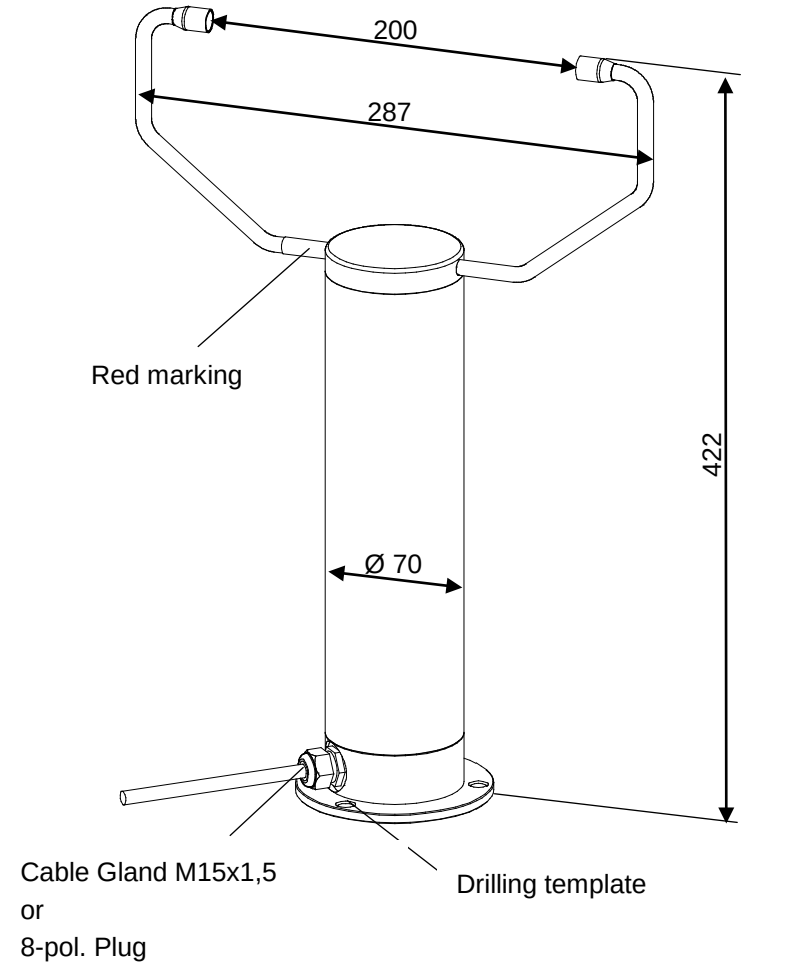

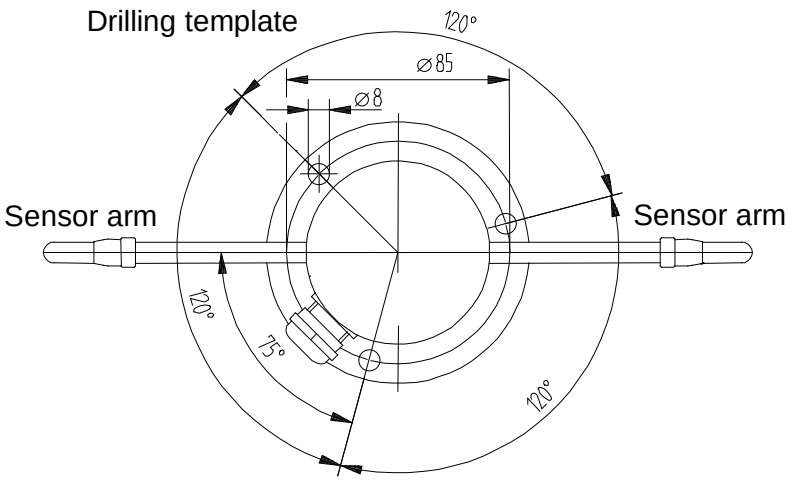

Figure 2: Dimension Drawing for 4.3865… and 3866…

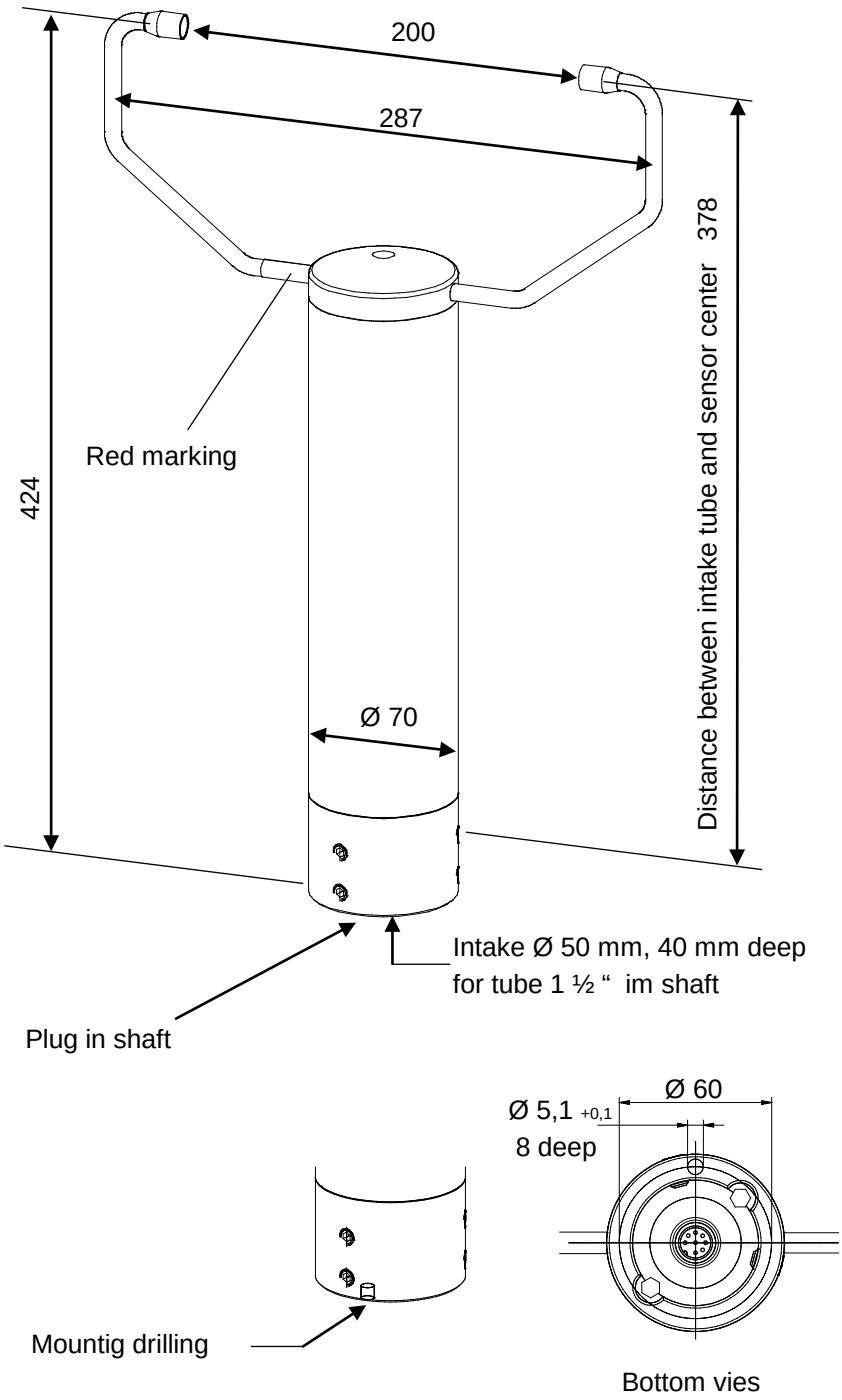

Figure 3: Dimension Drawing for 4.3867….

14 Accessories (available as optional features)

Connecting cable, complete	507751	15 m cable with socket outlet on transmitter side. The other end of the cable is equipped with core identification rings.
PC-program Meteo- Online	9.1700.98.000	For graphical display of measured values on a PC
Power supply unit	9.3388.00.000	For power supply of the Ultrasonic – Anemometer 4.386x.0x.xxx Primary: 230V/50Hz Secondary: 26V/90VA
Interface converter	9.1702.xx.000	For RS 422 signal conversion into RS 232

15 EC-Declaration of Conformity

Document-No.: **000602** Month: 01 Year: 14

Manufacturer: **A D O L F T H I E S G m b H & C o. K G**

Hauptstr. 76
D-37083 Göttingen
Tel.: (0551) 79001-0
Fax: (0551) 79001-65
email: Info@ThiesClima.com

Description of Product: **Ultrasonic Anemometer 1D**

Article No.	**4.3865.00.141**	**4.3865.00.340**	**4.3865.00.341**	
	4.3865.01.300	**4.3865.01.310**	**4.3865.01.316**	**4.3865.02.300**
	4.3866.00.340	**4.3866.00.348**	**4.3366.00.349**	**4.3866.01.310**
	4.3867.00.340	**4.3867.01.311**		

specified technical data in the document: **021567/09/13**

The indicated products correspond to the essential requirement of the following European Directives and Regulations:

2004/108/EC DIRECTIVE 2004/108/EC OF THE EUROPEAN PARLIAMENT AND OF THE COUNCIL of 15 December 2004 on the approximation of the laws of the Member States relating to electromagnetic compatibility and repealing Directive 89/336/EEC

2006/95/EC DIRECTIVE 2006/95/EC OF THE EUROPEAN PARLIAMENT AND OF THE COUNCIL of 12 December 2006 on the harmonisation of the laws of Member States relating to electrical equipment designed for use within certain voltage limits

552/2004/EC Regulation (EC) No 552/2004 of the European Parliament and the Council of 10 March 2004 on the interoperability of the European Air Traffic Management network (the interoperability Regulation)

The indicated products comply with the regulations of the directives. This is proved by the compliance with the following standards:

Reference number	Specification
IEC 61000-6-2: 2005	Electromagnetic compatibility Immunity for industrial environment
IEC 61000-6-3: 2006	Electromagnetic compatibility Emission standard for residential, commercial and light industrial environments
IEC 61010-1: 2001	Safety requirements for electrical equipment for measurement, control and laboratory use. Part 1: General requirements

Place: Göttingen Date: 20.01.2014

Legally binding signature: issuer:

....

Wolfgang Behrens, General Manager Joachim Beinhorn, Development Manager

This declaration certificates the compliance with the mentioned directives, however does not include any warranty of characteristics.
Please pay attention to the security advises of the provided instructions for use.

© Copyright: Adolf Thies GmbH & Co KG

ADOLF THIES GmbH & Co. KG
Hauptstraße 76 37083 Göttingen Germany
P.O. Box 3536 + 3541 37025 Göttingen
Phone +49 551 79001-0 Fax +49 551 79001-65
www.thiesclima.com info@thiesclima.com

- Alterations reserved -